SRI SHANMUGHA COLLEGE OF ENGINEERING AND TECHNOLOGY

(Approved by AICTE, Affiliated to Anna University and Accredited by NAAC & NBA (ECE)

Pullipalayam, Morur (P.O), Sankari (T.k), Salem (D.T) – 637 304

DEPARTMENT OF MECHANICAL ENGINEERING

ME8781 - Mechatronics Laboratory

Sri Shanmugha College of Engineering and Technology

Affiliated to Anna University and Approved by AICTE, NewDelhi
Accredited by NAAC and NBA
Sankari(Tk), Puthur

Department of Electronics & Communication Engineering

2019:20

ME8781 Mechatronics Laboratory Manual

(Anna University Regulation 2013)

Name	:
Register Number	:
Lab Name/Code	:
Semester/Year	:

Sri Shanmugha College of Engineering and Technology

Affiliated to Anna University and Approved by AICTE, NewDelhi
Accredited by NAAC and NBA
Sankari (Tk), Puthur

DEPARTMENT OF ELECTRONICS AND COMMUNICATION ENGINEERING

BONAFIDE CERTIFICATE

This is to Certified that bonafide record of work done by Mr./Ms./Mrs. _____ in the **ME8781 Mechatronics Laboratory** for the course of Electronics and Communication Engineering during VII th Semester of academic year 2019:20.

STAFF IN-CHARGE **HOD**

Register No.: _____

This record is submitted for VII semester Electronics and communication engineering practical examination of Anna University, Chennai held on _____.

INTERNAL EXAMINER **EXTERNAL EXAMINER**

INDEX

S.No	Date	Name of the Experiment	Page No.	Marks	Initial of Faculty
DESIGN AND TEST EXPERIMENTS					

Average:

ME8781 - MECHATRONICS LABORATORY

OBJECTIVES

To know the method of programming the microprocessor and also the design, modeling & analysis of basic electrical, hydraulic & pneumatic Systems which enable the students to understand the concept of mechatronics.

LIST OF EXPERIMENTS

1. Assembly language programming of 8085 – Addition – Subtraction – Multiplication – Division – Sorting – Code Conversion.
2. Stepper motor interface.
3. Traffic light interface.
4. Speed control of DC motor.
5. Study of various types of transducers.
6. Study of hydraulic, pneumatic and electro-pneumatic circuits.
7. Modelling and analysis of basic hydraulic, pneumatic and electrical circuits using Software.
8. Study of PLC and its applications.
9. Study of image processing technique.

OUTCOMES

Upon completion of this course, the students can able to design mechatronics system with the help of Microprocessor, PLC and other electrical and Electronics Circuits.

LIST OF EQUIPMENT FOR A BATCH OF 30 STUDENTS

S.NO	NAME OF THE EQUIPMENT	Qty
1	Basic Pneumatic Trainer Kit with manual and electrical controls/ PLC Control each	1
2	Basic Hydraulic Trainer Kit	1
3	Hydraulics and Pneumatics Systems Simulation Software	10
4	8051 - Microcontroller kit with stepper motor and drive circuit sets	2
5	Image processing system with hardware & software	1

REMARKS

MECHATRONICS

Mechatronics is the combination of Mechanical engineering, Electronic engineering, Computer engineering, software engineering, Control engineering and Systems Design engineering in order to design and manufacture useful products.

Mechatronics is a multi disciplinary field of engineering, that is to say it rejects splitting engineering into separate disciplines. Originally, mechatronics just included the combination between mechanics and electronics; hence the word is only a portmanteau of mechanics and electronics

French standard gives the following definition: “approach aiming at the synergistic integration of mechanics, electronics, control theory, and computer science within product design and manufacturing, in order to improve and/or optimize its functionality".

Description

Application of mechatronics

1. Machine vision
2. Automation and robotics
3. Servo-mechanics
4. Sensing and control systems
5. Automotive engineering, automotive equipment in the design of subsystems such as anti-lock braking systems
6. Computer-machine controls, such as computer driven machines like IE CNC milling machines
7. Expert systems
8. Industrial goods
9. Consumer products
10. Mechatronics systems
11. Medical mechatronics, medical imaging systems
12. Structural dynamic systems
13. Transportation and vehicular systems
14. Mechatronics as the new language of the automobile
15. Diagnostic, reliability, and control system techniques
16. Computer aided and integrated manufacturing systems
17. Computer-aided design
18. Engineering and manufacturing systems
19. Packaging
20. Microcontrollers / PLC's

Ex No : 1(a) *Date :*

ADDITION OF TWO 8-BIT NUMBERS

AIM

To write an assembly language for adding two 8 bit numbers by using micro processor kit.

APPARATUS REQUIRED

1. 8085 micro processor kit 8085 (0-5V)
2. DC battery

ALGORITHM

Step 1: Start the microprocessor

Step 2: Intialize the carry as 'Zero'

Step 3: Load the first 8 bit data into the accumulator

Step 4: Copy the contents of accumulator into the register 'B'

Step 5: Load the second 8 bit data into the accumulator.

Step 6: Add the 2 - 8 bit datas and check for carry.

Step 7: Jump on if no carry

Step 8: Increment carry if there is

Step 9: Store the added request in accumulator

Step 10: More the carry value to accumulator

Step 11: Store the carry value in accumulator

Step 12: Stop the program execution.

Address	Label	Mnemonics	Hex Code	Comments
4100		MVI C,00	OE, 00	Initialize the carry as zero

4102		LDA 4300	3A, (00, 43)	Load the first 8 bit data
4105		MOV, B,A	47	Copy the value of 8 bit data into register B
4106		LDA 4301	3A, (01, 43)	Load the second 8 bit data into the accumulator
4109		ADD B	80	Add the hoo values
410A		JNC	D2, 0E, 41	Jump on if no carry
410D		INR C	OC	If carry is there increment it by one
410E	Loop	STA 4302	32 (02, 43)	Stone the added value in the accumulator
4111		MOV A,C	79	More the value of carry to the accumulator from register C
4112		STA 4303	32 (03, 43)	Store the value of carry in the accumulator
4115		HLT	76	Stop the program execution

Input

Without carry

Input Address	Value
4300	04
4301	02

Output

Output Address	Value
4302	06
4303	00 (carry)

With carry

Input Address	Value
4300	FF
4301	FF
Output Address	Value
4302	FE
4303	01 (carry)

Calculation

```
        1111    1111
        1111    1111
      --------------------
(1)
        1111    1110
      ===========
         F       E
```

RESULT

Thus the assembly language program for 8 bit addition of two numbers was executed successfully by using 8085 micro processing kit.

Ex No : 1 (b) ***Date :***

SUBTRACTION OF TWO 8 BIT NUMBERS

AIM

To write a assembly language program for subtracting 2 bit (8) numbers by using-8085 micro processor kit

APPARATUS REQUIRED

1. 8085 micro processor kit (0-5V)
2. DC battery

ALGORITHM

STEP 1: Start the microprocessor

STEP 2: Initialize the carry as ‘Zero’

STEP 3: Load the first 8 bit data into the accumulator

STEP 4: Copy the contents of contents into the register ‘B’

STEP 5: Load the second 8 bit data into the accumulator.

STEP 6: Subtract the 2 8 bit datas and check for borrow.

STEP 7: Jump on if no borrow

STEP 8: Increment borrow if there is

STEP 9: 2’s compliment of accumulator is found out

STEP 10: Store the result in the accumulator

STEP 11: More the borrow value from ‘c’ to accumulator

STEP 12: Store the borrow value in the accumulator

STEP 13: Stop program execution

Address	Label	Mnemonics	Hex Code	Comments
4100		MVI C,00	OE, 00	Initialize the carry as zero
4102		LDA 4300	3A, (00, 43)	Load the first 8 bit data
4105		MOV, B,A	47	Copy the value of 8 bit data into register B
4106		LDA 4301	3A, (01, 43)	Load the second 8 bit data into the accumulator
4109		ADD B	80	Add the hoo values
410A		JNC	D2, 0E, 41	Jump on if no carry
410D		INR C	OC	If carry is there increment it by one
410E	Loop	STA 4302	32 (02, 43)	Stone the added value in the accumulator
4111		MOV A,C	79	More the value of carry to the accumulator from register C
4112		STA 4303	32 (03, 43)	Store the value of carry in the accumulator
4115		HLT	76	Stop the program execution

Input

Without borrow

Input Address	Value
4300	05
4301	07
Output Address	Value
4302	02
4303	00 (borrow)

With carry

borrow

Input Address	Value
4300	07
4301	05
Output Address	Value
4302	02

Calculation:

05 - 07

07 -
0111

CMA 1000

ADJ
0.1 0001

1001

05 - 0101

1110 (-
2)

RESULT

The assembly language program subtraction of two 8 bit numbers was executed successfully by using 8085 micro processing kit.

Ex No : 1(c) *Date :*

MULTIPLICATION OF TWO 8 – BIT NUMBERS

AIM

To write an assembly language for multiplying two 8 bit numbers by using 8085 micro processor kit.

APPARATUS REQUIRED

8085 microprocessor kit (0-5V)

DC battery

ALGORITHM

Step 1: Start the microprocessor

Step 2: Get the 1_{st} 8 bit numbers

Step 3: Move the 1_{st} 8it number to register 'B'

Step 4: Get the 2_{nd} 8 bit number

Step 5: Move the 2_{nd} 8 bit number to register 'C'

Step 6: Initialize the accumulator as zero

Step 7: Initialize the carry as zero

Step 8: Add both register 'B' value as accumulator

Step 9: Jump on if no carry

Step 10: Increment carry by 1 if there is

Step 11: Decrement the 2_{nd} value and repeat from step 8, till the 2_{nd} value becomes zero.

Step 12: Store the multiplied value in accumulator

Step 13: Move the carry value to accumulator

Step 14: Store the carry value in accumulator

Address	Label	Mnemonics	Hex Code	Comments
4100		LDA 4500	3A, 00, 45	Load the first 8 bit number
4103		MOV B,A	47	Move the 1st 8 bit data to register ‘B’
4104		LDA 4501	3A, 01, 45	Load the 2nd 16 bit number
4107		MOV C,A	4F	Move the 2 8 bit data to register ‘C’
4108		MVI A, 00	3E, 00	Intialise the accumulator as zero
410A		MVI D, 00	16, 00	Intialise the carry as zero
410C		ADD B	80	Add the contents of ‘B’ and accumulator
410D		INC	D2 11, 41	Jump if no carry
4110		INR D	14	Increment carry if there is
4111		DCR C	OD	Decrement the value ‘C’
4112		JNZ	C2 0C, 41	Jump if number zero
4115		STA 4502	32 02, 45	Store the result in accumulator
4118		MOV A,D	7A	Move the carry into accumulator
4119		STA 4503	32,03,45	Store the result in accumulator
411C		HLT	76	Stop the program execution

Input

Input Address	Value
4500	04
4501	02

Output

Output Address	Value
4502	08
4503	00

RESULT

The assembly language program for multiplication of two 8 bit numbers was executed using 8085 micro processing kit.

Ex No : 1(d) ***Date :***

DIVISION OF TWO 8 – BIT NUMBERS

AIM

To write an assembly language program for dividing two 8 bit numbers using microprocessor kit.

APPARATUS REQUIRED

1. 8085 microprocessor kit (0-5V)
2. DC battery

ALGORITHM

Step1: Start the microprocessor

Step2: Intialise the Quotient as zero

Step3: Load the 1_{st} 8 bit data

Step4: Copy the contents of accumulator into register 'B'

Step5: Load the 2_{nd} 8 bit data

Step6: Compare both the values

Step7: Jump if divisor is greater than dividend

Step8: Subtract the dividend value by divisor value

Step9: Increment Quotient

Step10: Jump to step 7, till the dividend becomes zero

Step11: Store the result (Quotient) value in accumulator

Step12: Move the remainder value to accumulator

Step13: Store the result in accumulator

Step14: Stop the program execution

Address	Label	Mnemonics	Hex Code	Comments
4100		MVI C, 00	0E, 00	Intialise Quotient as zero
4102		LDA, 4500	3A 00, 45	Get the 1st data
4105		MOV B,A	47	Copy the 1st data into register 'B'
4106		LDA, 4501	3A 01, 45	Get the 2nd data
4109		CMP B	B8	Compare the 2 values
410A		JC (LDP)	DA 12,41	Jump if dividend lesser than divisor
410D	Loop 2	SUB B	90	Subtract the 1st value by 2nd value
410E		INR C	0C	Increment Quotient (410D)
410F		JMP (LDP, 41)	C3, 0D, 41	Jump to Loop 1 till the value of dividend becomes zero
4112	Loop 1	STA 4502	32 02,45	Store the value in accumulator
4115		MOV A,C	79	Move the value of remainder to accumulator
4116		STA 4503	32 03,45	Store the remainder value in accumulator
4119		HLT	76	Stop the program execution

Input

Input Address	Value
4500	09
4501	02

Output

Output Address	Value
4502	04 (quotient)
4503	01 (reminder)

RESULT

The assembly language program for division of two 8 bit numbers was executed using 8085 micro processing kit.

Ex No : 1(e) ***Date :***

SORTING

(i) ASCENDING ORDER

AIM

To write a program to sort given ‘n’ numbers in ascending order

APPARATUS REQUIRED

8085 microprocessor kit (0-5V)

DC battery

ALGORITHM

Step1: Start the microprocessor

Step2: Accumulator is loaded with number of values to sorted and it is saved

Step3: Decrement 8 register (N-1) Repetitions)

Step4: Set ‘HL’ register pair as data array

Step5: Set ‘C’ register as counter for (N-1) repetitions

Step6: Load a data of the array in accumulator

Step7: Compare the data pointed in ‘HL’ pair

Step8: If the value of accumulator is smaller than memory, then jump to step 10.

Step9: Otherwise exchange the contents of ‘HL’ pair and accumulator

Step10: Decrement ‘C’ register, if the of ‘C’ is not zero go to step 6

Step11: Decrement ‘B’ register, if value of ‘B’ is not zero, go step 3

Step12: Stop the program execution

Address	Label	Mnemonics	Hex Code	Comments
4100		LDA 4500	3A, 00,45	Load the number of values
4103		MOV B,A	47	Move it ‘B’ register
4104		DCR B	05	For (N-1) comparisons
4105	Loop 3	LXI H, 4500	21, 00,45	Set the pointer for array
4108		MOV C,M	4E	Count for (N-1) comparisons
4109		DCR C	0D	For (N-1) comparisons
410A		INX H	23	Increment pointer
410B	Loop 2	MOV A,M	7E	Get one data in array ‘A’
410C		INX H	23	Increment pointer
410D		CMP M	BE	Compare next with accumulator
410E		JC	DA, 16, 41	If content less memory go ahead
4111		MOV D,M	56	If it is greater than interchange it
4112		MOV M,A	77	Memory content
4113		DCX H	2B	Exchange the content of memory pointed by ‘HL’ by previous location
4114		MOV M,D	72	One in by ‘HL’ and previous location
4115		INX H	23	Increment pointer
4116	Loop 1	DCR C	0D	Decrement ‘C’ register
4117		JNZ Loop 1	C2, 0B, 41	Repeat until ‘C’ is zero
411B		JNZ Loop 2	C2, 05, 41	Repeat till ‘B’ is zero
411E		HLT	76	Stop the program execution

Input

Input Address	Value
4500	04
4501	AB
4502	BC
4503	01
4504	0A

Output Address & Value

Output Address	Value
4500	04
4501	01
4502	0A
4503	AB
4504	BC

RESULT

The assembly language program for sorting numbers in ascending order was executed by microprocessor kit.

(ii) DESCENDING ORDER

AIM

To write a program to sort given ‘n’ numbers in descending order

APPARATUS REQUIRED

1. 8085 microprocessor kit (0-5V)
2. DC battery

ALGORITHM

Step 1: Start the microprocessor

Step 2: Load the number of values into accumulator and save the number of values in register ‘B’g

Step 3: Decrement register ‘B’ for (N-1) Repetitions

Step 4: Set ‘HL’ register pair as data array address pointer and load the data of array in accumulator

Step 5: Set ‘C’ register as counter for (N-1) repetitions

Step 6: Increment ‘HL’ pair (data address pointer)

Step 7: Compare the data pointed by ‘HL’ with accumulator

Step 8: If the value of accumulator is larger than memory, then jump to step 10, otherwise next step.

Step 9: Exchange the contents of memory pointed by ‘HL’ and accumulator

Step 10: Decrement ‘C’ register, if the of ‘C’ is not zero go to step 6, otherwise next step.

Step 11: Decrement ‘B’ register, if ‘B’ is not zero, go step 3, otherwise next step.

Step 12: Stop the program execution

Address	Label	Mnemonics	Hex Code	Comments
4100		LDA 4500	3A, 00,45	Load the number of values in accumulator
4103		MOV B,A	47	Move it to ‘B’ register
4104		DCR B	05	For (N-1) comparisons
4105	Loop 3	LXI H, 4500	21, 00,45	Set the pointer for array
4108		MOV C,M	4E	Count for (N-1) comparisons
4109		DCR C	0D	For (N-1) comparisons
410A		INX H	23	Increment pointer
410B	Loop 2	MOV A,M	7E	Get one data from array
410C		INX H	23	Increment pointer
410D		CMP M	BE	Compare next with number
410E		ICE, Loop 1	D2, 16,41	If content ‘A’ is greater than

				content of ‘HL’ pair
4111		MOV D,M	56	If it is greater than interchange the datas
4112		MOV M,A	77	Accumulator to memory value
4113		DCX H	2B	Decrement memory pointer
4114		MOV M,D	72	Move the old to ‘HL’ and previous location
4115		INX H	23	Increment pointer
4116	Loop 1	DCR C	0D	Decrement ‘C’ register
4117		JNZ Loop 2	C2, 0B, 41	Repeat till ‘C’ is zero
411B		JNZ Loop 3	C2, 05, 41	Jump to loop till the value of ‘B’ be
411E		HLT	76	Stop the program execution

Input Address	Value
4500	04
4501	AB
4502	BC
4503	01
4504	0A

Output Address & Value

Output Address	Value
4500	04
4501	BC
4502	AB
4503	0A
4504	01

RESULT

The assembly language program for sorting ‘4’ numbers in descending order was executed successfully using microprocessor kit.

Ex No : 1(f) ***Date :***

CODE CONVERSION – DECIMAL TO HEX

AIM

To convert a given decimal number to hexadecimal

ALGORITHM

Step1. Initialize the memory location to the data pointer.

Step2. Increment B register.

Step3. Increment accumulator by 1 and adjust it to decimal every time.

Step4. Compare the given decimal number with accumulator value.

Step5. When both matches, the equivalent hexadecimal value is in B register.

Step6. Store the resultant in memory location.

PROGRAM

ADDRESS	OPCODE	LABEL	MNEMONICS	OPERAND	COMMENTS
8000			LXI	H,8100	Initialize HL reg. to 8100H
8001					
8002					
8003			MVI	A,00	Initialize A register.
8004					
8005			MVI	B,00	Initialize B register..
8006					
8007		LOOP	INR	B	Increment B reg.
8008			ADI	01	Increment A reg
8009					
800A			DAA		Decimal Adjust Accumulator
800B			CMP	M	Compare M & A
800C			JNZ	LOOP	If acc and given number are not equal, then go to LOOP
800D					
800E					
800F			MOV	A,B	Transfer B reg to acc.
8010			STA	8101	Store the result in a memory location.
8011					
8012					
8013			HLT		Stop the program

RESULT

INPUT		OUTPUT	
ADDRESS	DATA	ADDRESS	DATA
8100		8101	

RESULT

Thus an ALP program for conversion of decimal to hexadecimal was written and executed.

Ex No : 1(f) ***Date :***

CODE CONVERSION –HEXADECIMAL TO DECIMAL

AIM

To convert a given hexadecimal number to decimal.

ALGORITHM

Step1: Initialize the memory location to the data pointer. Step2:

Increment B register.

Step3: Increment accumulator by 1 and adjust it to decimal every time. Step4: Compare the given hexadecimal number with B register value. Step5: When both match, the equivalent decimal value is in A register. Step6: Store the resultant in memory location.

ADDRESS	OPCODE	LABEL	MNEMONICS	OPERAND	COMMENTS
8000			LXI	H,8100	Initialize HL reg. to
8001					8100H
8002					
8003			MVI	A,00	Initialize A register.
8004					
8005			MVI	B,00	Initialize B register.
8006					
8007			MVI	C,00	Initialize C register for carry.
8008					
8009		LOOP	INR	B	Increment B reg.
800A			ADI	01	Increment A reg
800C			DAA		Decimal Adjust Accumulator
800D			JNC	NEXT	If there is no carry go to
800E					NEXT.
800F					
8010			INR	C	Increment c register.
8011		NEXT	MOV	D,A	Transfer A to D
8012			MOV	A,B	Transfer B to A
8013			CMP	M	Compare M & A
8014			MOV	A,D	Transfer D to A
8015			JNZ	LOOP	If acc and given number are
8016					not equal, then go to LOOP
8017					
8018			STA	8101	Store the result in a memory
8019					location.
801A					
801B			MOV	A,C	Transfer C to A

801C			STA	8102	Store the carry in another memory location.
801D					
801E					
801F			HLT		Stop the program

RESULT

INPUT		OUTPUT	
ADDRESS	DATA	ADDRESS	DATA
8100		8101	
		8102	

RESULT

Thus an ALP program for conversion of hexadecimal to decimal was written and executed.

Ex No : 2 *Date :*

STEPPER MOTOR INTERFACING WITH 8051

AIM

To interface a stepper motor with 8051 microcontroller and operate it.

THEORY

A motor in which the rotor is able to assume only discrete stationary angular position is a stepper motor. The rotary motion occurs in a step-wise manner from one equilibrium position to the next. Stepper Motors are used very wisely in position control systems like printers, disk drives, process control machine tools, etc.

The basic two -phase stepper motor consists of two pairs of stator poles. Each of the four poles has its own winding. The excitation of any one winding generates a North Pole. A South Pole gets induced at the diametrically opposite side. The rotor magnetic system has two end faces. It is a permanent magnet with one face as South Pole and the other as North Pole.

The Stepper Motor windings A1, A2, B1, B2 are cyclically excited with a DC current to run the motor in clockwise direction. By reversing the phase sequence as A1, B2, A2, B1, anticlockwise stepping can be obtained.

2-PHASE SWITCHING SCHEME:

In this scheme, any two adjacent stator windings are energized. The switching scheme is shown in the table given below.This scheme produces more torque

ANTICLOCKWISE						**CLOCKWISE**					
STEP	**A1**	**A2**	**B1**	**B2**	**DATA**	**STEP**	**A1**	**A2**	**B1**	**B2**	**DATA**
1	1	0	0	1	9h	1	1	0	1	0	Ah
2	0	1	0	1	5h	2	0	1	1	0	6h
3	0	1	1	0	6h	3	0	1	0	1	5h
4	1	0	1	0	Ah	4	1	0	0	1	9h

ADDRESS DECODING LOGIC

The 74138 chip is used for generating the address decoding logic to generate the device select pulses, CS1 & CS2 for selecting the IC 74175.The 74175 latches the data bus to the stepper motor driving circuitry.

Stepper Motor requires logic signals of relatively high power. Therefore, the interface circuitry that generates the driving pulses use silicon Darlington pair transistors. The inputs for the interface circuit are TTL pulses generated under software control using the Microcontroller Kit.

PROGRAMME

Address	**OPCODES**	*Label*			Comments
4100		START:	MOV	DPTR, #TABLE	Load the start address of switching
4103			MOV	R0, #04	Load the count in R0
4105		LOOP:	MOVX	A, @DPTR	Load the number in TABLE into A
4106			PUSH	DPH	Push DPTR value to Stack
4108			PUSH	DPL	
410A			MOV	DPTR, #0FFC0h	Load the Motor port address into DPTR
410D			MOVX	@DPTR, A	Send the value in A to stepper Motor port address
410E			MOV	R4, #0FFh	Delay loop to cause a specific amount of time delay before next data item is sent to the Motor
4110		DELAY:	MOV	R5, #0FFh	
4112		DELAY1:	DJNZ	R5, DELAY1	
4114			DJNZ	R4, DELAY	
4116			POP	DPL	POP back DPTR value from Stack

4118			POP	DPH	
411A			INC	DPTR	Increment DPTR to point to next item in the table
411B			DJNZ	R0, LOOP	Decrement R0, if not zero repeat the loop
411D			SJMP	START	Short jump to Start of the program to make the motor rotate continuously
411F		TABLE:	DB	09 05 06 0Ah	Values as per two-phase switching scheme

PROCEDURE

Enter the above program starting from location 4100.and execute the same. The stepper motor rotates. Varying the count at R4 and R5 can vary the speed. Entering the data in the look- up TABLE in the reverse order can vary direction of rotation.

RESULT

Thus a stepper motor was interfaced with 8051 and run in forward and reverse directions at various speeds

Ex No :3 *Date :*

TRAFFIC LIGHT INTERFACE

AIM

To write an assembly language program to simulate the traffic light at an intersection using a traffic light interface.

APPARATUS REQUIRED

ALGORITHM:

1. Initialize the ports.
2. Initialize the memory content, with some address to the data.
3. Read data for each sequence from the memory and display it through the ports.
4. After completing all the sequences, repeat from step2.

BIT ALLOCATION

BIT	**LED**	**BIT**	**LED**	**BIT**	**LED**
PA0	SOUTH LEFT	PB0	NORTH LEFT	PC0	WEST STRAIGHT
PA1	SOUTH RIGHT	PB1	NORTH RIGHT	PC1	NORTH STRAIGHT
PA2	SOUTH AMBER	PB2	NORTH AMBER	PC2	EAST STRAIGHT
PA3	SOUTH RED	PB3	NORTH RED	PC3	SOUTH STRAIGHT
PA4	EAST LEFT	PB4	WEST LEFT	PC4	NORTH PD
PA5	EAST RIGHT	PB5	WEST RIGHT	PC5	WEST PD
PA6	EAST	PB6	WEST	PC6	SOUTH PD

	AMBER		AMBER		

SL.NO	ITEM	SPECIFICATION	QUANTITY
1	Microprocessor kit	4185,Vi Microsystems	1
2	Power supply	+5 V dc	1
3	Traffic light interface kit	Vi Microsystems	1

CONTROL ----- 0F (FOR 8255 PPI)

PORT A ------0C

PORT B ------0D

PORT C ------0E

PROGRAM

ADDRESS	OPCODE	LABEL	MNEMONICS	OPERAND	COMMENT
4100	3E		MVI	A, 41	Move 41H immediately to accumulator
4102	D3		OUT	0F	Output contents of accumulator to OF port
4104		REPEAT	LXI	H,DATA_SQ	Load address 417B to HL register
4107	11		LXI	D,DATA_E	Load address 4187 to DE
410A	CD		CALL	OUT	Call out address 4142
410D	EB		XCHG		Exchange contents of HL
410E	7E		MOV	A, M	Move M content to accumulator
410F	D3		OUT	0D	Load port A into output port
4111	CD		CALL	DELAY1	Call delay address
4114	EB		XCHG		Exchange content of HL
4115	13		INX	D	Increment the content of D
4116	23		INX	H	Increment the content of H
4117	CD		CALL	OUT	Call out the address
411A	EB		XCHG		Exchange content of

					HL
411B	7E		MOV	A, M	Move M content to accumulator
411C	D3		OUT	0D	Load port B into output port
411E	CD		CALL	DELAY1	Call DELAY address
4121	EB		XCHG		Exchange content of HL
4122	13		INX	D	Increment D register
4123	23		INX	H	Increment H register
4124	CD		CALL	OUT	Call specified address
4127	EB		XCHG		Exchange content of HL
4128	7E		MOV	A, M	Move M content to accumulator
4129	D3		OUT	0E	Load port C into output port

412B	CD		CALL	DELAY1	Call DELAY address
412E	EB		XCHG		Exchange content of HL
412F	13		INX	D	Increment D register
4130	23		INX	H	Increment H register
4131	CD		CALL	OUT	Call specified address
4134	EB		XCHG		Exchange content of HL
4135	7E		MOV	A, M	Move M content to accumulator
4136	D3		OUT	0E	Load port C into output port
4138	23		INX	H	Increment H register
4139	7E		MOV	A, M	Move M content to

					accumulator
413A	D3		OUT	0C	Load port A into output port
413C	CD		CALL	DELAY1	Call DELAY address
413F	C3		JMP	REPEAT	Jump to specified address
4142	7E	OUT	MOV	A, M	Move M content to accumulator
4143	D3		OUT	0E	Load port C into output port
4145	23		INX	H	Increment H register
4146	7E		MOV	A, M	Move M content to accumulator
4147	D3		OUT	0D	Load port B into output port
4149	23		INX	H	Increment H register
414B	D3		OUT	0C	Load port A into output port
414D	CD		CALL	DELAY	Call DELAY address
4150	C9		RET		Return to accumulator
4151	E5	DELAY	PUSH	H	Push the register H
4152	21		LXI	H,001F	Load 00 1F in HL register pair
4155	01		LXI	B,FFFF	Load FF FF in DE register pair
4158	0B		DCX	B	Decrement B register
4159	78		MOV	A, B	Move B content to accumulator
415A	B1		ORA	C	OR content of C with
415B	C2		JNZ	LOOP	Jump to LOOP if no zero
415E	2B		DCX	H	Decrement H register
415F	7D		MOV	A, L	Move L content to accumulator

RESULT

Thus an assembly language program to simulate the traffic light at an intersection using a traffic light interfaces was written and implemented.

Ex No : 4 *Date :*

SPEED CONTROL OF DC MOTOR

AIM:

To write an assembly language program to control the speed of DC motor using 8051.

FACILITIES REQUIRED AND PROCEDURE:

a) Facilities required to do the experiment:

Sl.No.	Facilities Required	Quantity
1	8051 Microprocessor Kit	1
2	DC Power Supply 5V	1

b) Procedure for doing the experiment:

Sl.No.	Details of the
1	Start the program. Store the 8-bit data into the accumulator.
2	Initialize the counter. Move the content of accumulator to the data pointer.
3	Terminate the program.

c) Program:

ADDRESS	OPCODE	MNEMONICS	COMMEN
4500	74 FF	MOV A, #FF	Move FF into accumulator
4502	90 FF C0	MOV DPTR,#FF10H	Load the value FF 10H into the data pointer
4505	F0	MOVX @DPTR,A	Move the data content to the accumulator
4506	80 FF	SIMPL	Instruction is executed.

d) Output:

A Reg	Speed	Accumalator
FF	High	5V
7F	Medium	3V
55	Low	2V

RESULT

Thus the program to control the speed of DC motor was executed and verified successfully

Ex No : ***Date :***

STUDY OF HYDRAULIC, PNEUMATIC AND ELECTRO PNEUMATIC CIRCUITS

AIM

To study the circuits of hydraulic, pneumatic and electro pneumatic drives.

DESCRIPTION

1. Control of a Single-Acting Hydraulic Cylinder
2. Control of a Double-Acting Hydraulic Cylinder
3. Control of single acting pneumatic cylinder
4. Control of double acting pneumatic cylinder
5. Control of single acting electro pneumatic cylinder
6. Control of double acting electro pneumatic cylinder

HYDRAULIC CIRCUITS

A hydraulic circuit is a group of components such as pumps, actuators, control valves, conductors and fittings arranged to perform useful work. There are three important considerations in designing a hydraulic circuit:

Control of a Single-Acting Hydraulic Cylinder

Figure shows that the control of a single-acting, spring return cylinder using a three-way two-position manually actuated, spring offset direction-control valve (DCV). In the spring offset mode, full pump flow goes to the tank through the pressure-relief valve (PRV). The spring in the rod end of the cylinder retracts the piston as the oil from the blank end drains back into the tank. When the valve is manually actuated into its next position, pump flow extends the cylinder.

After full extension, pump flow goes through the relief valve. Deactivation of the DCV allows the cylinder to retract as the DCV shifts into its spring offset mode.

RESULT:

Ex No : 6 *Date :*

PLC CONTROL OF SINGLE ACTING CYLINDER USING AND LOGIC

AIM

Conduct the test to simulate the single acting cylinder using PLC diagram.

APPARATUS REQUIRED

1. Compressor
2. FRL
3. Air tube
4. Single acting cylinder
5. Plc
6. RS logic starter software
7. 3/2 single solenoid valve

PROCEDURE

1. Draw the circuit diagram.
2. Provide +24V and -24V from PLC trainer to electro pneumatic panel.
3. Output of the PLC is direct connect to input of 3/2 single solenoid coil.
4. Open the RS logic starter software in desktop.
5. Interface PLC with the system using RS 232 cable.
6. Following the operating procedure of RS logic starter software.
7. Connect the air supply to FRL unit.
8. Any one output of FRL unit direct connects to choosing valves.
9. Check the all circuit in panel and ladder diagram.
10. Run the PLC.
11. Observe the output.

TRUTH TABLE

INPUT		OUTPUT
A	**B**	**C = A * B**
0	0	0
1	0	0
1	1	1
0	1	0

CIRCUIT (AND GATE)

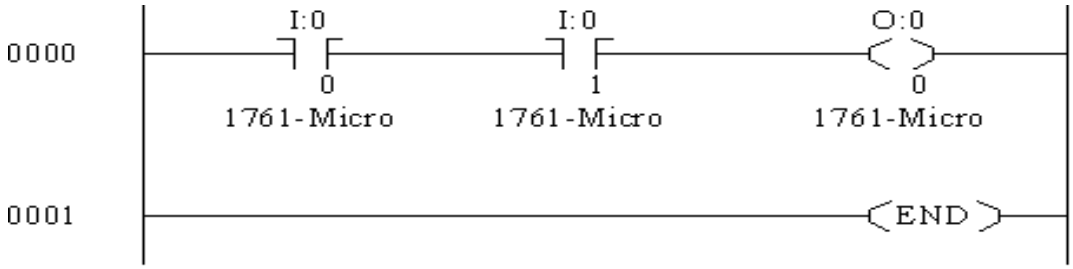

RESULT

Thus the actuation of single acting cylinder with and AND gate was done.

Ex No : 7 *Date :*

ACUATION OF SINGLE ACTING CYLINDER BY OR GATE USING PLC

AIM

Conduct the test to simulate the single acting cylinder using PLC diagram.

APPARATUS REQUIRED

12. Compressor
13. FRL
14. Air tube
15. Single acting cylinder
16. Plc
17. RS logic starter software
18. 3/2 single solenoid valve

PROCEDURE

1. Draw the circuit diagram.
2. Provide +24V and -24V from PLC trainer to electro pneumatic panel.
3. Open the RS logic starter software in desktop.
4. Interface PLC with the system using RS 232 cable.
5. Write a ladder diagram.
6. Output of the PLC is direct connecting to input of solenoid coil.
7. Following the operating procedure of RS logic starter software.
8. Connect the air supply to FRL unit.
9. Check the all circuit in panel and ladder diagram.
10. Run the PLC.
11. Observe the operation, when any one input is high, output is high.

TRUTH TABLE

INPUT		OUTPUT
A	**B**	**C = A+B**
0	0	0
1	0	1
1	1	1
0	1	1

CIRCUIT (OR GATE)

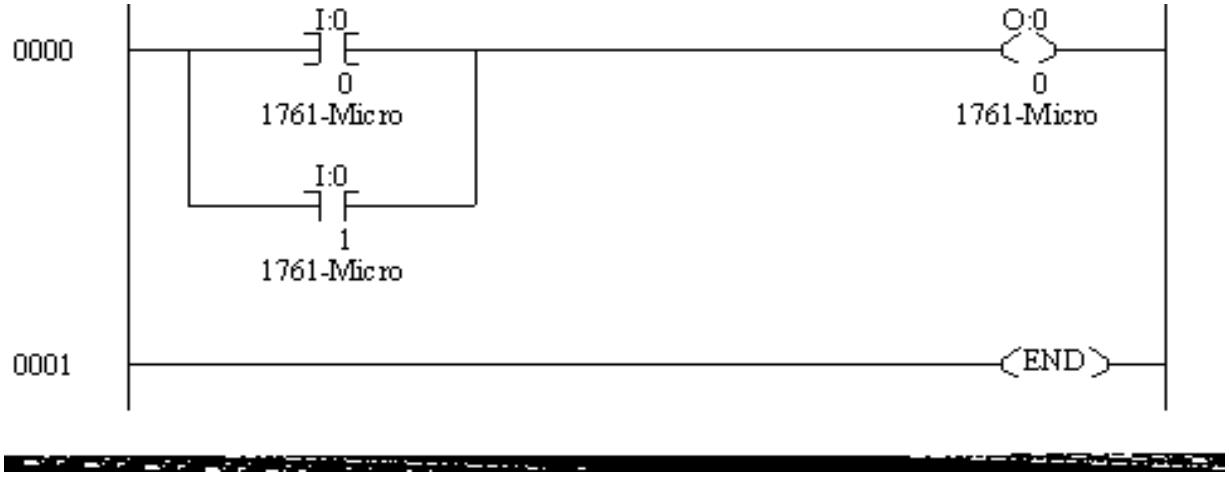

RESULT

Thus the actuation of single acting cylinder with and OR gate was done using PLC.

Ex No : *Date :*

ACUATION OF SINGLE ACTING CYLINDER WITH ON DELAY TIMER USING PLC

AIM

Conduct the test to simulate the single acting cylinder using PLC diagram.

APPARATUS REQUIRED

12. Compressor
13. FRL
14. Air tube
15. Single acting cylinder
16. Plc
17. RS logic starter software
18. 3/2 single solenoid valve

PROCEDURE:

1. Draw the circuit diagram.
2. Provide +24V and -24V from PLC trainer to electro pneumatic panel.
3. Open the RS logic starter software in desktop.
4. Interface PLC with the system using RS 232 cable.
5. Write a ladder diagram.
6. Output of the PLC is direct connecting to input of solenoid coil.
7. Following the operating procedure of RS logic starter software.
8. Connect the air supply to FRL unit.
9. Check the all circuit in panel and ladder diagram.
10. Run the PLC.
11. Observe the operation, cylinder will be actuated after given time delay.

CIRCUIT (ON DELAY TIMER)

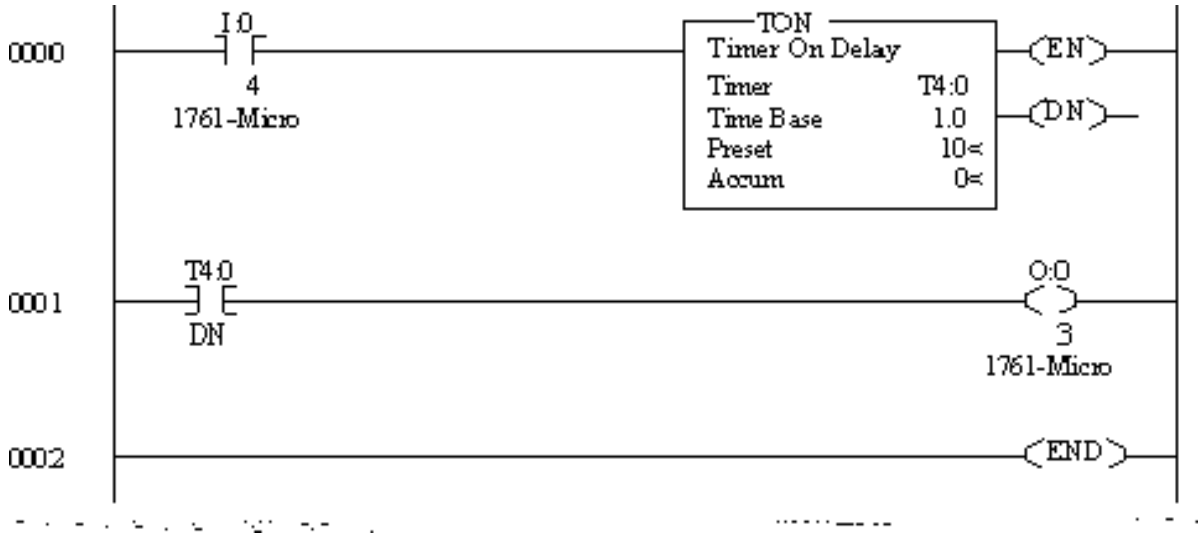

RESULT

Thus the actuation of single acting cylinder with ON Delay timer was done using PLC.

Ex No : *Date :*

SIMULATE THE SINGLE ACING CYLINDER WITH OFF DELAY TIMER USING PLC

AIM

Conduct the test to simulate the single acting cylinder using PLC diagram.

APPARATUS REQUIRED

12. Compressor
13. FRL
14. Air tube
15. Single acting cylinder
16. Plc
17. RS logic starter software
18. 3/2 single solenoid valve

PROCEDURE

1. Draw the circuit diagram.
2. Provide +24V and -24V from PLC trainer to electro pneumatic panel.
3. Open the RS logic starter software in desktop.
4. Interface PLC with the system using RS 232 cable.
5. Write a ladder diagram.
6. Output of the PLC is direct connecting to input of solenoid coil.
7. Following the operating procedure of RS logic starter software.
8. Connect the air supply to FRL unit.
9. Check the all circuit in panel and ladder diagram.
10. Run the PLC.
11. Observe the operation; cylinder goes to off position after particular time delay added.

CIRCUIT (OFF DELAY TIMER)

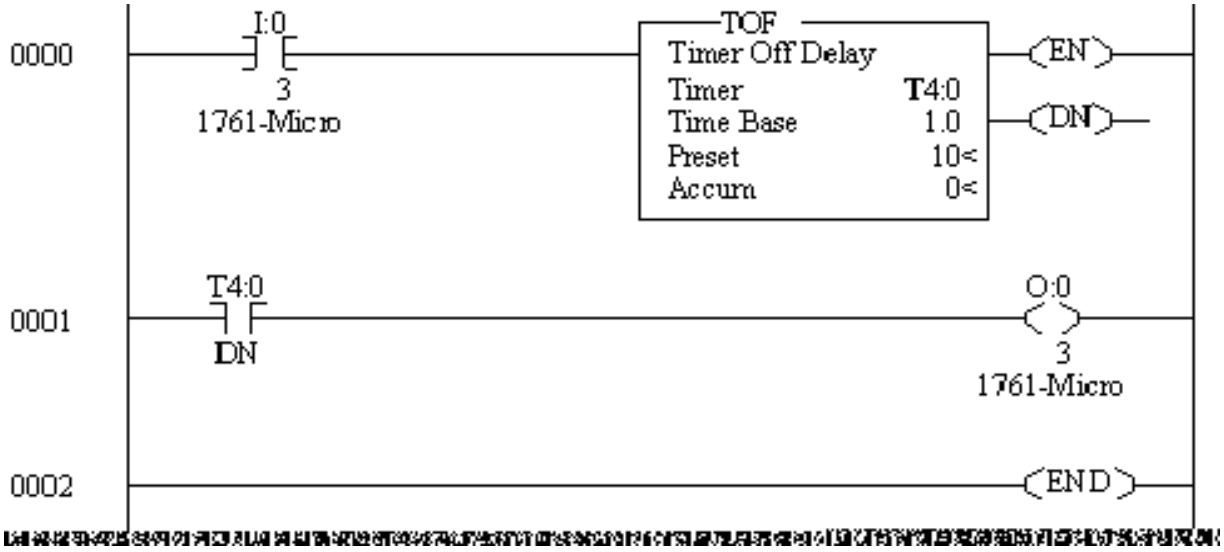

RESULT

Thus the actuation of single acting cylinder with OFF Delay timer was done using PLC.

Ex No : *Date :*

CONTROL OF DOUBLE ACTING CYLINDER WITH UP COUNTER USING PLC

AIM

Conduct the test to control the double acting cylinder with up counter using PLC diagram.

APPARATUS REQUIRED

12. Compressor
13. FRL
14. Air tube
15. Single acting cylinder
16. Plc
17. RS logic starter software
18. 3/2 single solenoid valve

PROCEDURE:

1. Draw the circuit diagram.
2. Provide +24V and -24V from PLC trainer to electro pneumatic panel.
3. Open the RS logic starter software in desktop.
4. Interface PLC with the system using RS 232 cable.
5. Write a ladder diagram.
6. Output of the PLC (q1) is direct connecting to input of solenoid coil.
7. Following the operating procedure of RS logic starter software.
8. Connect the air supply to FRL unit.
9. Check the all circuit in panel and ladder diagram.
10. Run the PLC program
11. Cylinder will run continuously as ON, OFF with preset value in counter.

CIRCUIT (UP COUNTER)

RESULT

Thus the actuation of double acting cylinder completed with up counter using PLC.

Ex No : *Date :*

AUTOMATIC ACTUATION OF SINGLE ACTING CYLINDER USING PLC

AIM

Conduct the test to simulate the automatic sequence of single acting cylinder using PLC.

APPARATUS REQUIRED

12. Compressor
13. FRL
14. Air tube
15. Single acting cylinder
16. Plc
17. RS logic starter software
18. 3/2 single solenoid valve

PROCEDURE:

1. Draw the circuit diagram.
2. Provide +24V and -24V from PLC trainer to electro pneumatic panel.
3. Open the RS logic starter software in desktop.
4. Interface PLC with the system using RS 232 cable.
5. Write a ladder diagram.
6. Output of the PLC (q1) is direct connecting to input of solenoid coil.
7. Following the operating procedure of RS logic starter software.
8. Connect the air supply to FRL unit.
9. Check the all circuit in panel and ladder diagram.
10. Run the PLC program
11. Observe the working of single acting cylinder is automatic reciprocating.

CIRCUIT (Automatic Actuation Of Single Acting Cylinder)

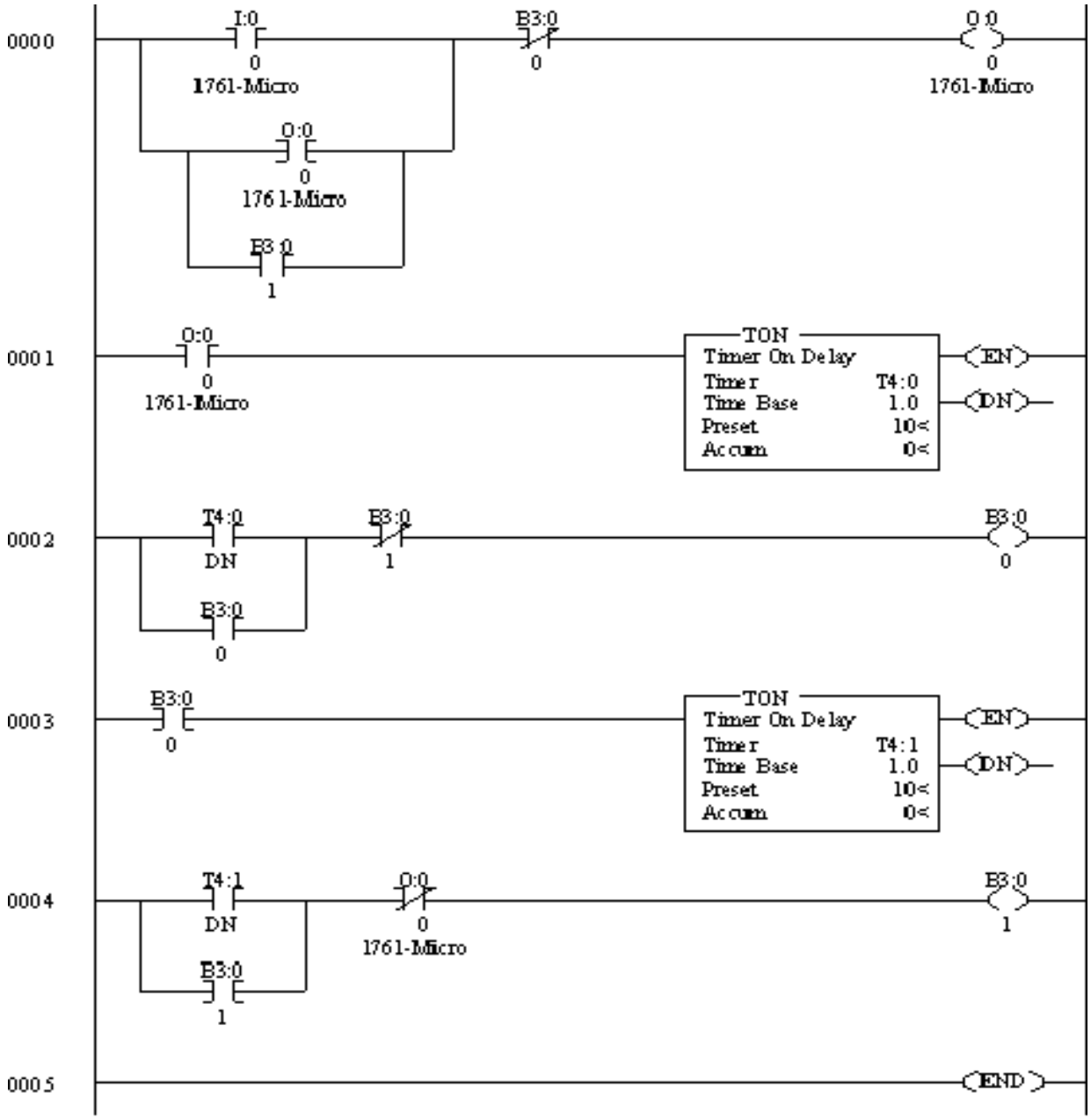

RESULT

Thus the actuation of automatic sequence of single acting cylinder completed using PLC.

Ex No : *Date :*

AUTOMATIC ACTUATION OF DOUBLE ACTING CYLINDER USING PLC

AIM

Conduct the test to simulate the automatic sequence of double acting cylinder using PLC.

APPARATUS REQUIRED

12. Compressor
13. FRL
14. Air tube
15. Single acting cylinder
16. Plc
17. RS logic starter software
18. 3/2 single solenoid valve

PROCEDURE:

1. Draw the circuit diagram.
2. Provide +24V and -24V from PLC trainer to electro pneumatic panel.
3. Open the RS logic starter software in desktop.
4. Interface PLC with the system using RS 232 cable.
5. Write a ladder diagram.
6. Output of the PLC (q1) & (q2)is direct connecting to input of solenoid coil.
7. Following the operating procedure of RS logic starter software.
8. Connect the air supply to FRL unit.
9. Check the all circuit in panel and ladder diagram.
10. Run the PLC program
11. Observe the working of double acting cylinder is automatic reciprocating.

CIRCUIT (Automatic Actuation Of Double Acting Cylinder)

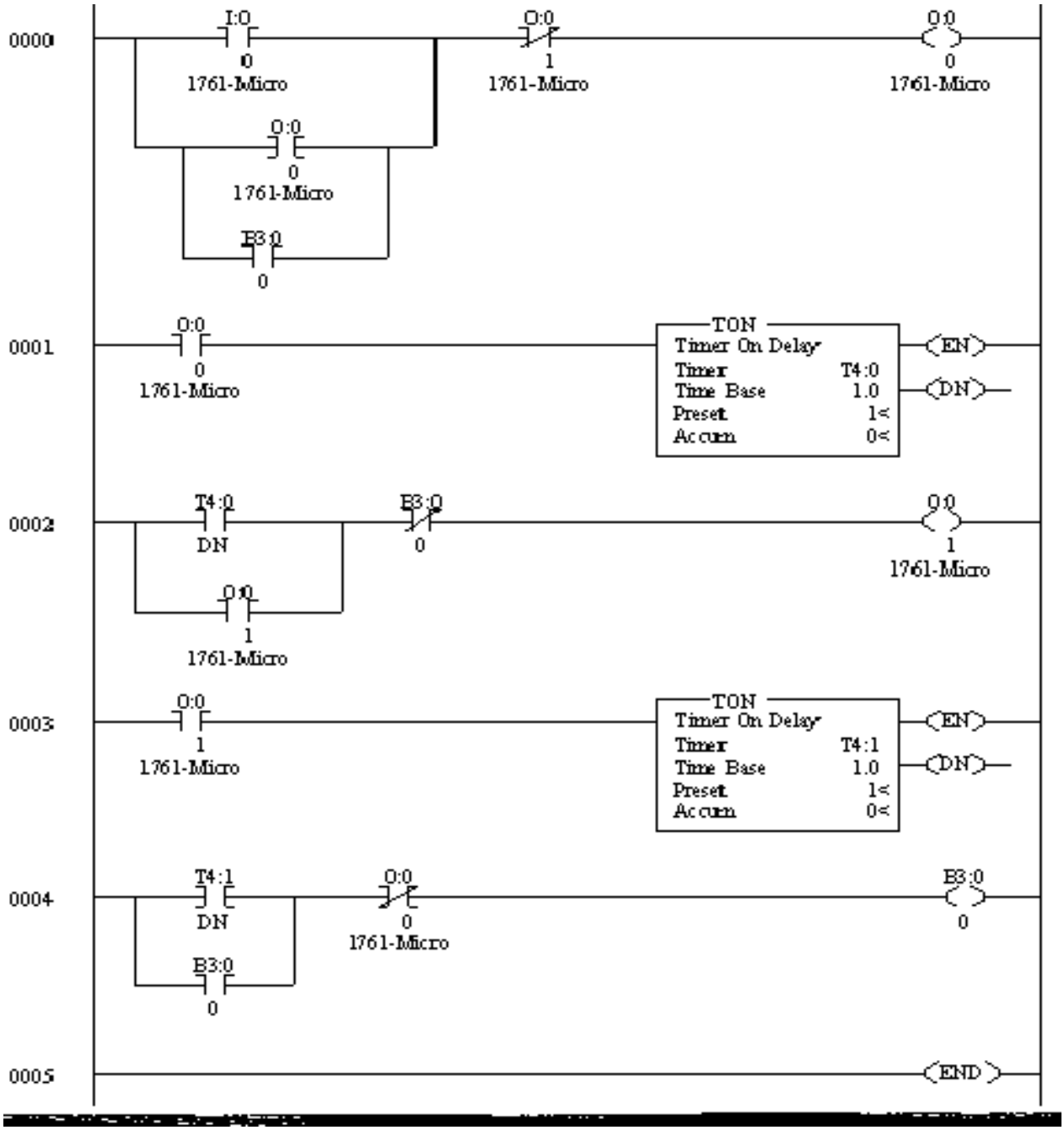

RESULT

Thus the actuation of automatic sequence of double acting cylinder completed using PLC.

Ex No : *Date :*

PLC CONTROL OF SEQUENCING CIRCUIT USING PLC LADDER DIAGRAM

AIM

Conduct the test to run a circuit for the sequence A+B+A-B- using PLC

APPARATUS REQUIRED

12. Compressor
13. FRL
14. Air tube
15. Double acting cylinder
16. Mini actuate cylinder
17. PLC
18. RS logic starter software
19. 3/2 single solenoid valve

PROCEDURE:

1. Draw the circuit diagram.
2. Provide +24V and -24V from PLC trainer to electro pneumatic panel.
3. Open the RS logic starter software in desktop.
4. Interface PLC with the system using RS 232 cable.
5. Write a ladder diagram.
6. Both outputs of PLC (q1,q2, q3,q4) are directly connected to inputs of solenoid coils.
7. Following the operating procedure of RS logic starter software.
8. Connect the air supply to FRL unit.
9. Check the all circuit in panel and ladder diagram.
10. Run the PLC program
11. Observe the working of double acting cylinder is automatic reciprocating using the circuit A+B+A-B-

OBSERVATION

In this electro pneumatic circuit the push button FWR 1 and FWD2 both are actuate only the solenoid coil s1will be energized the double acting cylinder rod will be extracted. If the any one of this push button will press the solenoid coil s1 could not energized and then the cylinder rod should not extracted.

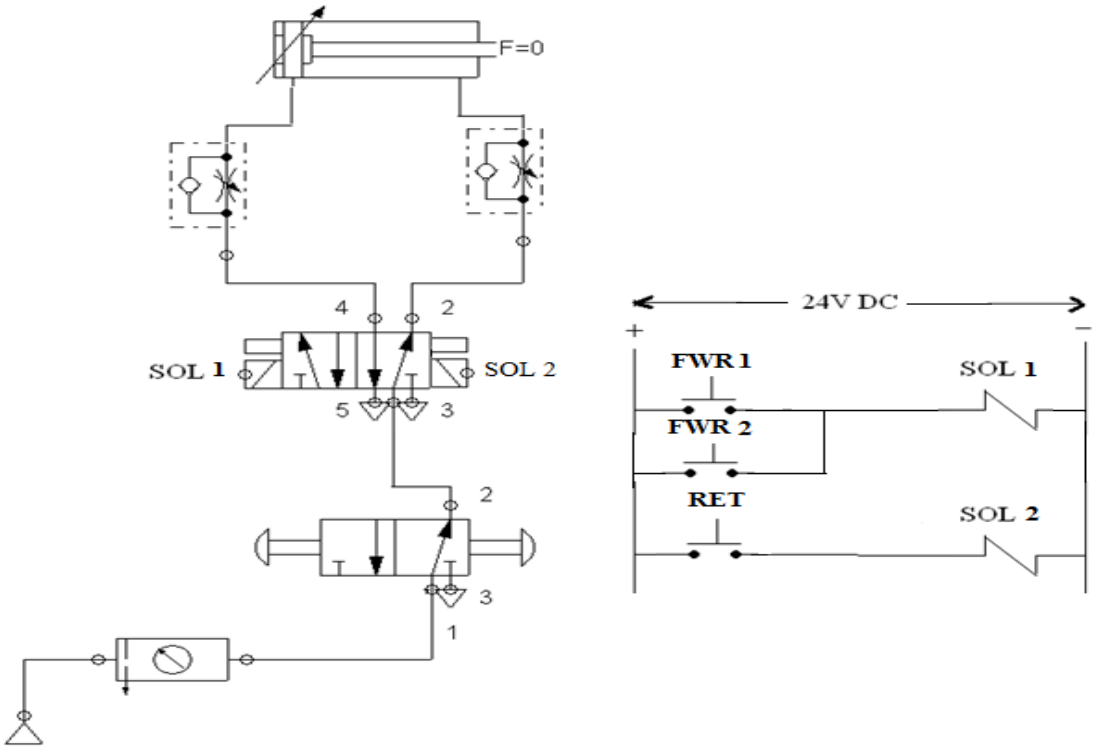

OBSERVATION

In this electro pneumatic circuit the push button FWR 1, FWR 2 any one of this push button we should press then only the solenoid coil s1will be energized the double acting cylinder rod will be extracted. If both of this push button will press the solenoid coil s1 could not energized and then the cylinder rod should not extracted.

RESULT

The ladder diagram for the automatic running of double acting cylinder is using this circuit A+B+A-B-.is designed and executed.

Ex No : *Date :*

CONTROLLING THE SINGLE ACTING CYLINDER USING PUSH BUTTON SWITCH

AIM

To construct a pneumatic circuit to control the single acting cylinder using push button switch.

APPARATUS REQUIRED

12. Compressor
13. FRL
14. Air tube
15. Single acting cylinder
16. Batch card

PROCEDURE

1. Draw the circuit diagram.
2. Electro controller gives –ve voltage to pneumatic panel.
3. Input of push button is getting from solenoid valve output.
4. Connect the air supply to FRL unit.
5. Check all the connections carefully
6. Test the circuit.
7. Observe the working of the cylinder using the 3/2 single solenoid valve.

RESULT

Thus the movement of single acting cylinder was carried out using the 3/2 single solenoid valve.

Ex No : *Date :*

CONTROLLING DOUBLE ACTING CYLINDER USING PUSH BUTTON SWITCH

AIM

To construct a pneumatic circuit to control the double acting cylinder using push button switch.

APPARATUS REQUIRED

8. Compressor
9. FRL
10. Air tube
11. 5/2 double solenoid valve
12. Double acting cylinder
13. Batch card
14. Electrical controller

PROCEDURE

1. Draw the circuit diagram and connect the air supply to FRL unit.
2. Provide power supply to the pneumatic trainer from control trainer by interfacing 24V + and –
3. Input of push button is getting from solenoid valve output.
4. Check all the connections carefully
5. Test the circuit.
6. When the solenoid is given a signal by a push button switch. DCV is activated to double acting cylinder.
7. When off button is pressed the signal solenoid are cut and the solenoids are de-energized and the DCV comes to the original position.

RESULT

Thus the movement of double acting cylinder was carried out using the 5/2 double solenoid valve.

Ex No : *Date :*

CONTROLLING DOUBLE ACTING CYLINDER THROUGH SPDT SWITCH

AIM

To construct a pneumatic circuit to control the single acting cylinder using push button switch.

APPARATUS REQUIRED

8. Compressor
9. FRL
10. Air tube
11. 5/2 double solenoid valve
12. Double acting cylinder
13. Batch card
14. Electrical controller

PROCEDURE

1. Draw the circuit diagram.
2. Provide power supply to the pneumatic trainer from control trainer by interfacing 24V + and –
3. Using the SPDT switch energize the corresponding solenoid valve to get the desired movement in the cylinder.
4. Supply the air to FRL unit.
5. Electro controller gives –ve voltage to pneumatic panel.
6. Input of push button is getting from solenoid valve output.
7. Connect the air supply to FRL unit.
8. Check all the connections carefully
9. Test the circuit.
10. Observe the working of the cylinder using the 3/2 single solenoid valve.

RESULT

Thus the movement of double acting cylinder was carried out using the 5/2 double solenoid valve.

Ex No : *Date :*

ACTUATION OF SINGLE ACTING CYLINDER USING ON DELAY TIMER

AIM

Develop an electro pneumatic circuit to control the single acting cylinder through timer.

APPARATUS REQUIRED

11. Compressor
12. FRL
13. Air tube
14. 5/2 double solenoid valve
15. Double acting cylinder
16. Batch card
17. Electrical controller

PROCEDURE

1. Draw the circuit diagram.
2. Provide power supply to pneumatic trainer from electrical controller by interfacing the +ve & -ve.
3. Using the SPDT switch energize the corresponding solenoid to get the desired movement of the cylinder.
4. Actuate the time delay circuit.
5. From time delay give connection to single along cylinders according to time set.
6. Design and draw the pneumatic circuit.
7. Connect the air supply.
8. Test the circuit.
9. Observe the working of the cylinder

RESULT

Thus the movement of single acting cylinder was carried out using time delay.

Ex No : *Date :*

CONTINUOUS ACTUATION OF DOUBLE ACTING CYLINDER USIN MAGNETIC PROXIMITY SENSOR

AIM

Construct a pneumatic circuit to control the double acting cylinder electrically using magnetic proximity sensor.

APPARATUS REQUIRED

10. Compressor
11. FRL
12. Air tube
13. 5/2 double solenoid valve
14. Double acting cylinder
15. Batch card
16. Electrical controller
17. sensors

PROCEDURE

1. Draw the circuit diagram.
2. Connect the circuit diagram in all components.
3. Connect air supply to FRL unit.
4. Connect the electrical circuit from electrical controller to panel (24+ and 24-)
5. Connect proximity sensors output to 5/2 double solenoid valve input.
6. Check all circuit in panel.
7. Test the circuit
8. Observe the working in double acting cylinder activated.

RESULT

Thus the movement of double acting cylinder was carried out using the magnetic proximity sensor.

Ex No : *Date :*

CONTROLLING PRESSURE VARIABLE THROUGH PID CONTROLLER

AIM

Conduct the test to observe the performance of PID controller on Pressure Process.

APPARUTUS REQUIRED

1. VMPA-62A
2. VDPID-03
3. PC with process control and Lab View software.
4. Patch chords
5. RS 232 cable and loop cable.

HAND VALVE SETTINGS

HV1 - Fully Open

HV2 - Fully Open

HV3 - Fully Close

HV4 - Partially Open

PRESSURE RANGE

Input - 0 to 250 mm WC

Output - 4 to 20 mA

PROCEDURE

1. Ensure the availability of water.
2. Interface the digital controller with process and PC.
3. Make the connection as per connection diagram.
4. Ensure hand valve settings are correct.
5. Switch ON VMPA-62A unit and digital controller with PC.
6. Invoke process control software or lab view software.
7. Select pressure PID.

8. Heater/Pump ON switch should be in pump mode.
9. Enter the parameters and observe the response of various controllers at various set points.
10. Stop the process.
11. Save the response and conclude the behavior of pressure process.

TABULATION

S.No	Time in (sec)	Pressure in(N/mm^2)

RESULT

Thus the performance of the PID controller on pressure process was studied.

Ex No : *Date :*

CONTROLLING FLOW VARIABLE THROUGH PID CONTROLLER

AIM

Conduct the test to observe the performance of PID controller on Flow Process.

APPARUTUS REQUIRED

1. VMPA-62A
2. VDPID-03
3. PC with process control and Lab View software.
4. Patch chords
5. RS 232 cable and loop cable.

HAND VALVE SETTINGS

HV1 - Fully Open

HV2 - Fully Open

HV3 - Fully Close

HV4 - Fully Open

FLOW RANGE

Input - 50 to 500 LPH

Output - 4 to 20 mA DC

PROCEDURE

1. Ensure the availability of water.
2. Interface the digital controller with process and PC.
3. Take the connection as per connection diagram.
4. Ensure hand valve settings are correct.
5. Switch ON VMPA-62A unit and digital controller with PC.
6. Invoke process control software or lab view software.
7. Select Flow PID.
8. Heater/Pump ON switch should be in pump mode.
9. Enter the parameters and observe the response of various controllers at various set points.
10. Stop the process.
11. Save the response and conclude the behavior of Flow process.

TABULATION

S.NO	TIME (sec)	FLOW (LPH)

Ex No : *Date :*

CONTROLLING TEMPERATURE VARIABLE THROUGH PID CONTROLLER

AIM

Conduct the test to observe the performance of PID controller on Temperature Process.

APPARUTUS REQUIRED

1. VMPA-62A
2. VDPID-03
3. PC with process control and Lab View software.
4. Patch chords
5. RS 232 cable and loop cable.

HAND VALVE SETTINGS

HV1 - Partially Open

HV2 - Fully Close

HV3 - Fully Open

TEMPERATUR RANGE

Input - 0 to 100ºc

Output - 4 to 20 mA DC

PROCEDURE

1. Ensure the availability of water.
2. Interface the digital controller with process and PC.
3. Make the connection as per connection diagram.
4. Ensure hand valve settings are correct.
5. Switch ON VMPA-62A unit and digital controller with PC.
6. Invoke process control software or lab view software.
7. Select temperature PID.
8. Heater/Pump ON switch should be in pump mode.
9. Enter the parameters and observe the response of various controllers at various set points.
10. Stop the process.
11. Save the response and conclude the behavior of pressure process.

RESULT

Thus the performance of the PID controller on Temperature Process was studied.

Ex No : *Date :*

DESIGN AND TESTING FOR ACTUATION OF HYDRUALIC CYLINDER TO FIND OUT FORCE Vs PRESSURE

AIM

To actuate the hydraulic cylinder and find out the force Vs pressure.

APPARATUS REQUIRED

1. Oil tank
2. Single phase motor
3. Pressure relief valve
4. 4/3 double acting solenoid valve
5. Double acting cylinder
6. Load cell
7. Data activation card than lab view software.

PROCEDURE

1. Switch on the electrical power supply with motor.
2. Switch on the power supply to the control unit
3. Open the lab view software in the system.
4. Interface hydraulic trainer with system using RS-232
5. Open the force, go to operate, click the run then power on
6. Now extend the system by pressing the up button.
7. Load cell indicates the force value in the monitor.
8. Now adjust the pressure regulator and set the maximum pressure as 25 Kg/cm^2
9. Retract the cylinder.
10. Once again forward the cylinder; you have adjusted the pressure in pressure regulator.
11. You have seen the force in monitoring
12. Repeat the force value for different pressure.

TABULATION

S.No	Pressure in Kg/cm^2	Displayed force in Kg	Calculate force in Kg	% of errors

CALCULATION

(a) PRESSURE= $\frac{\text{FORCE}}{\text{AREA}}$ Kg/Cm^2

(b) AREA= $\frac{3.1428}{4} \times D^2$ Cm^2

D- Cylinder diameter

Cylinder diameter=40mm

Cylinder rod diameter=30mm

Cylinder stroke length= 150mm

(C) % of Error= $\frac{\text{Displayed force} - \text{Calculated force}}{\text{Displayed force}} \times 10$

MODEL CALCULATION

RESULT

The Actuation of Hydraulic Cylinder Was Carried Out.

Ex No : *Date :*

DESIGN AND TESTING FOR ACTUATION OF HYDRUALIC CYLINDER TO FIND OUT SPEED Vs DISCHARGE

AIM

To actuate the hydraulic cylinder and find out the Speed Vs Discharge.

APPARATUS REQUIRED

1. Oil tank
2. Single phase motor
3. Gear pump.
4. Pressure relief valve
5. 4/3 double acting solenoid valve
6. Flow control valve.
7. Double acting cylinder
8. Load cell
9. Data activation card than lab view software.

PROCEDURE

10. Switch on the electrical power supply with motor.
11. Switch on the power supply to the control unit
12. Open the lab view software in the system.
13. Interface hydraulic trainer with system using RS-232
14. Open the speed, go to operate, click the run then power on
15. Now regulate the flow control valve contract the system by pressing down position. After seen monitor in velocity cm/sec.
16. Now regulate the flow control valve and set the maximum flow to find the up and velocity
17. Repeat the velocity values for different flows.

TABULATION

S.no	Velocity in Up (Cm/Sec)	Velocity in Down (Cm/Sec)	Discharge in Up (Lits/Sec)	Discharge in Down (Lits/Sec)

CALCULATION

(a) Velocity (Speed) = $\frac{\text{FLOW}}{\text{AREA}}$ Cm/ Sec

(b) AREA= $\frac{\pi}{4} \times D^2$ Cm^2

Flow = Discharge (Q) in lits/sec

Flow =Velocity x Area

MODEL CALCULATION

RESULT

The Actuation of Hydraulic Cylinder Was Carried Out.

Ex No : *Date :*

SERVO CONTROLLER INTERFACING FOR OPEN LOOP SYSTEM

AIM

To study the performance of open loop by using servo motor.

COMPONENTS REQUIRED

1. AC Servo motor
2. PLC
3. WINPRO Ladder software
4. Pc, connecting cable
5. Patch card

PROCEDURE

OPEN LOOP SYSTEM

1. Load the WIN Pro ladder software in Pc
2. Open the PLC trainer
3. Connect the PLC servo controller kit
4. Open the new folder and draw the ladder logic diagram.
5. Connect drive and Pc.
6. Set the speed and direction and other drives
7. Connect the PLC and Pc and run the program.

CIRCUIT DIAGRAM

OBSERVATION

In the open loop circuit we design function for run the AC servo motor and the control the speed or positions. We give that input command 200 rpm or 230 ˚ angle. In the input commands the open loop system act not accurate because the some error signals occurred due to some voltage deviations. So the output of the open loop system is not accurate.

TABULATION:

S.No	INPUT SPEED (rpm)	OUTPUT SPEED (measured by tachometer) (rpm)	ERROR %
1	230	220	4.5
2	300	280	7.1
3	500	485	3

RESULT

Thus the performance for AC servo motor was studied for open loop system.

Ex No : *Date :*

SERVO CONTROLLER INTERFACING FOR CLOSED LOOP SYSTEM

AIM

To study the performance of closed loop by using servo motor.

COMPONENTS REQUIRED

1. AC Servo motor
2. PLC
3. WINPRO Ladder software
4. Pc, connecting cable
5. Patch card

PROCEDURE

CLOSED LOOP SYSTEM

1. Load the WIN Pro ladder software in Pc
2. Open the PLC trainer
3. Connect the PLC and servo controller unit.
4. Logic diagram
5. Connect the drive and Pc
6. Run the program.

CIRCUIT DIAGRAM

OBSERVATION

In the closed loop system we control the AC motor speed as well as position. In the closed loop system control's output signals based on feedback device. In the feedback device is connected in to the output side to input comparator side. So in this closed loop system reduces the error signals based on the feedback device and then the output will more accurate.

TABULATION

S.No	INPUT SPEED (rpm)	OUTPUT SPEED (measured by tachometer) (rpm)	ERROR %
1	230	229.5	0.21
2	300	300	0
3	500	500	0

RESULT

Thus the performance for AC servo motor was studied for closed loop system.