LABORATORY MATERIAL BE2561

Basic Electrical, Electronics and

Instrumentation Engineering Laboratory

Sri Shanmugha College of Engineering and Technology

DEPARTMENT OF ELECTRONICS AND COMMUNICATION ENGINEERING
SSCET, Sankari – 637304

Contents

Ex No: 1	Load Test on Separately Excited DC Generator
Date:	

AIM:

To conduct suitable experiment on the given DC Generator and to draw the load characteristics of the same when its field is separately excited.

OBJECTIVES:

1. To find the general voltage (E_g) of a separately excited DC generator for different field currents (I_f) by open circuit test.
2. To find the armature resistance (R_a)
3. To determine Internal, External Characteristics of given DC generation by conducting load test.

APPARATUS REQUIRED:

S.NO	APPARATUS NAME	RANGE	TYPE	QUANTITY
1.	Ammeter	(0-20) A	MC	1
		(0-2) A	MC	1
2.	Voltmeter	(0-300) V	MC	1
3.	Rheostat			1
4.	Rheostat			1
5.	Tachometer	-	Digital	1
6.	DPST switch	-	-	1
7.	Loading Rheostat	5KW	-	1
	Connecting wires	-	-	As required

FORMULA USED:

$$E_g = V_L + I_a R_a$$

Where,

I_a – Armature current (A)
R_a – Armature resistance in ohms = 1.5Ω (given)
E_g – Generated emf (V)
V_L – Load Voltage(V)

PRECAUTON:

1. The motor field rheostat should be kept at maximum position at the time of starting.
2. The generator field rheostat should be kept at maximum position at the time of starting.
3. DPST switch 2 is opened during OCC test.
4. SPST switch is opened at starting to note the residual voltage.

PROCEDURE:

1. The DPST switch 2 is closed when the voltage is obtained to rated value.
2. Then the load is applied using loading rheostat, thereby increasing the load current (I_L).
3. Note down the load current (I_L), load voltage (V_L) & field current (I_f).
4. Repeat the same procedure up to the rated current is obtained.

TABLE 1.1 LOAD TEST OF DC SHUNT GENERATOR

Armature Resistance $R_a = 1.5\Omega$

S.No	Field Current I_f (A)	Load Current I_L (A)	Load Voltage V_L (V)	$I_a = I_L$ (A)	$E_g = V_L + I_aR_a$ (V)

MODAL GRAPH:

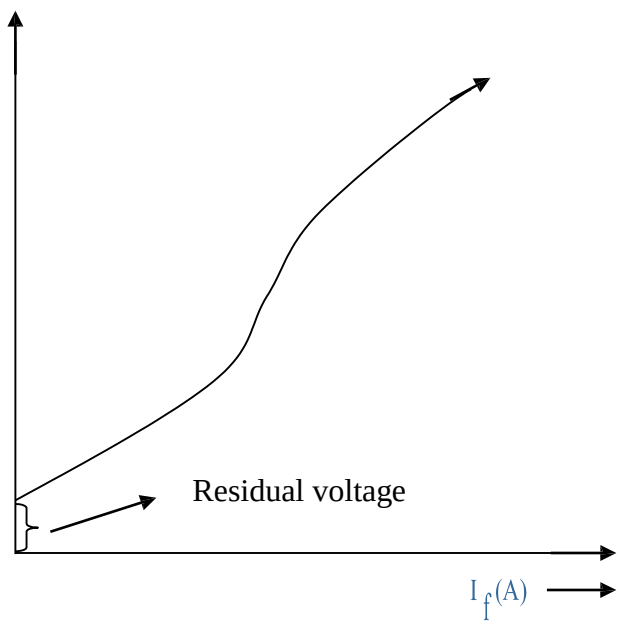

Fig 1.1 Load Characteristics

RESULT:

Viva Question:

1. State Faraday's law of induction.
2. Mention the basic requirement for the production of emf.
3. Which rule gives the direction of induced emf?
4. Which types of DC armature winding requires equalizers rings?
5. Which type of winding is selected for low voltage, high current DC machines?
6. What are the functions of armature core?
7. Why in a DC machine, the armature core should be laminated?
8. State the function of a commutator in a DC generator.
9. Explain the need for equalizers ring connection with DC armature winding.
10. What is the working principle of a DC generator?
11. Explain the types of DC generators.
12. How a separately excited generator produces the emf at starting and open circuit?
13. What is meant by internal and external characteristics?
14. What are pole coils? Mention its purpose in a DC machine.
15. What is commutator?
16. What is meant by critical resistance of a generator?
17. Which generator can't build if there is no residual magnetism?
18. What is armature reaction in a DC generator?
19. How is the inter-pole winding in DC machine excited?

Ex No: 2	Load Test on Single Phase Transformer
Date:	

AIM:

To draw the load characteristics of a given single phase transformer by conducting load test.

OBJECTIVE:

Draw the following graph

1. Load current Vs efficiency
2. Load current Vs % regulation

APPARATUS REQUIRED:

S.NO	APPARATUS NAME	RANGE	TYPE	QUANTITY
1.	Transformer	1 KVA	Wire wound	1
2.	Ammeter	0-5A	MI	1
3.	Voltmeter	0-300V	MI	1
4.	Wattmeter	300V,10A	UPF	2
5.	Lamp Load	5KW	Variable	1
6.	Connecting wires	-	-	As required

FORMULA USED:

1. Percentage of efficiency = $W_2 / W_1 \times 100$
2. Percentage of up regulation = $(V_{NL}-V_{FL})/V_{FL} \times 100$
3. Percentage of down regulation = $(V_{NL}-V_{FL})/V_{NL} \times 100$

Where W_1 = is the input power in watts

W_2 = is the output power in watts

V_{FL} = is the full load voltage in volts

V_{NL}= is the no load voltage in volts.

PRECAUTIONS:

1. Fuse should be selected such that its current rating is 120% of no load current of the transformer.
2. The DPST switch is opened at the time of starting the experiment while giving connections.
3. The load should be in the off position while at the start of the experiment.

PROCEDURE:

1. The connections are made as per the circuit diagram shown in the figure.
2. The DPST switch is closed and the supply is given to the circuit
3. The no load readings are noted.
4. By varying the lamp load in steps, corresponding ammeter, voltmeter and wattmeter readings are noted down.
5. Repeat the same procedure, up to the rated current is obtained.
6. All the readings are tabulated in tabular column and required quantities are calculated to draw characteristics curves.

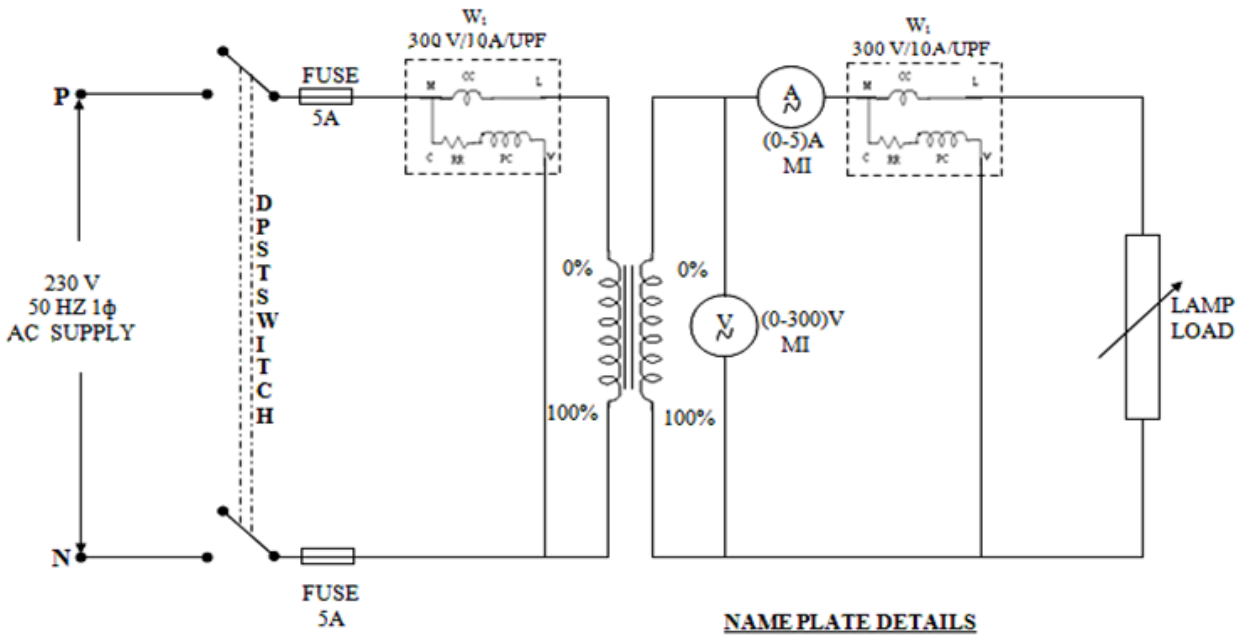

Fig 2.1 Load Test on Single Phase Transformer

MODAL GRAPH:

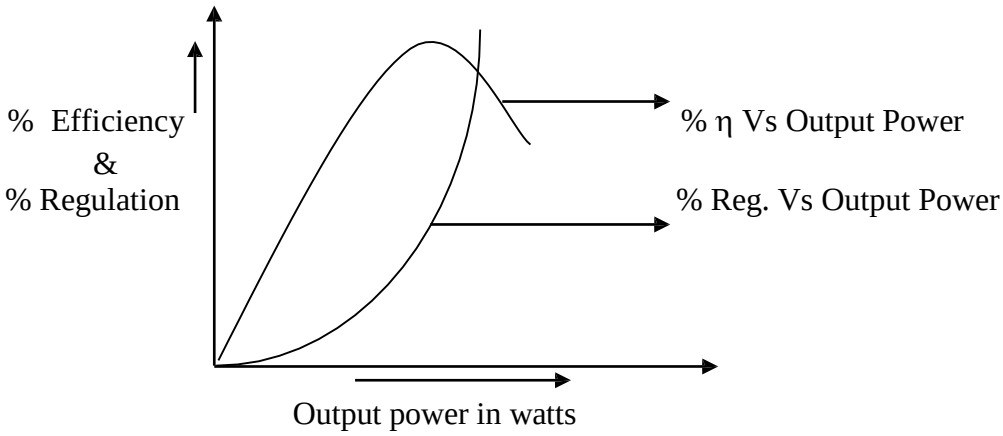

TABLE 2.1 LOAD TEST ON SINGLE PHASE TRANSFORMER

Multiplication Factor W_1=
Multiplication Factor W_2=

S.No	Secondary Current (A)	Secondary Voltage (Volts)	Input Power (Watts)	Output Power (Watts)	Efficiency %	Up Voltage Regulation %	Down Voltage Regulation %

RESULT:

VIVA QUESTIONS:

1. What are the various losses in a transformer?
2. The efficiency of a transformer does not depend on KVA rating. True or false?
3. State the conditions under which the transformer efficiency is maximum and the voltage is zero.
4. Explain why the efficiency of transformer is very high compared to other machines.
5. Define all day efficiency of a transformer.
6. State the conditions under which OC test is conducted on a transformer.
7. State the conditions under which SC test is conducted on a transformer.
8. State why the open circuit test on a transformer is conducted at rated voltage.
9. What are quantities that can be found from short circuit test?
10. Explain why only a low voltage is applied to the transformer during SC test.
11. The efficiency of two identical transformers under load conditions can be determined by which test?
12. Why transformers are rated in KVA?
13. What is Auto-transformer?
14. What is Ideal transformer?
15. What are the types of transformer?
16. How is magnetic leakage reduced to a minimum in commercial transformers?
17. Mention the factors on which hysteresis loss depends?
18. How can eddy current loss be minimized?
19. In practice, what determines the thickness of the laminae or stampings?
20. Is copper loss affected by power factor? Why?

Ex No: 3	Load Test on Induction Motor
Date:	

AIM:

To conduct load test on single phase induction motor and also to draw the performance characteristics.

OBJECTIVE:

The student can understand the performance of the Single phase induction motor in such a way that how the speeds falls, the power factor improves and current increases in output

APPARATUS REQUIRED:

S.NO	APPARATUS NAME	RANGE	TYPE	QUANTITY
1	Ammeter	(0-10 A)	M I	1
2	Voltmeter	(0-300 V)	M I	1
3	Wattmeter	300V / 10 A	UPF	1
4	Tachometer	-	Digital	1
5	Connecting wires	-	-	As required

FORMULA USED:

1. Torque (T) = (S_1~S_2) x 9.81 x R in Nm.

   Where,

   S_1, S_2 are spring balance readings in kg.
   R is the radius of the brake drum in m.

2. Power output = $\frac{2\pi NT}{60}$ in watts

   Where,

   N is the speed of the motor in rpm.
   T is the torque in Nm.

3. Power input (P_i) = Wattmeter reading in Watts.

4. Percentage efficiency = $\frac{Output\ Power}{Input\ Power} X 100$

5. Power factor = $\frac{P_i}{V_L I_L}$ (No unit)

6. $\%slip = \frac{N_s - N}{N_s} * 100$

TABLE 3.1 LOAD TEST ON SINGLE PHASE INDUCTION MOTOR

Radius of Brake Drum = m
Circumference of Brake Drum= m
Multiplying Factor =

S. No	Line Voltage Vl Volts	Load Current Il A	Input Power (Watts)		Speed N rpm	Spring Balance Readings (kg)			Torque T Nm	Slip %	Power Factor	Output Power (Watts)	Efficiency %
			Measured	Actual		S_1 kg	S_2 kg	S_1~S_2 kg					

PRECAUTIONS:

1. The rating of the fuse should not be more than 120% of rated current
2. Ac electrical quantities should be measured by moving iron instruments.
3. There should be no load while starting the machine.
4. Water should be poured to the break drum when load is applied to reduce the heat.

PROCEDURE:

1. The circuit connections are made as per the circuit diagram
2. The motor is started and the no load reading of ammeter, voltmeter, wattmeter, spring balance and speed are noted in the tabular column
3. The motor is loaded till the rated current and the corresponding readings are noted in tabular column
4. The performance characteristics are drawn by using tabulated readings and calculated values.

MODAL GRAPH:

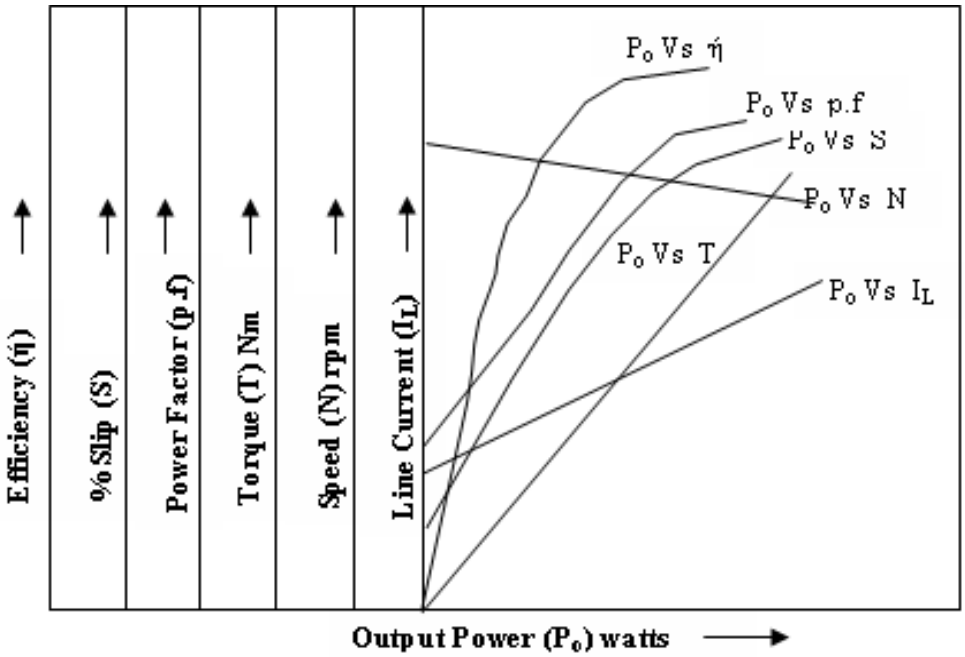

Fig 3.1 Performance characteristics

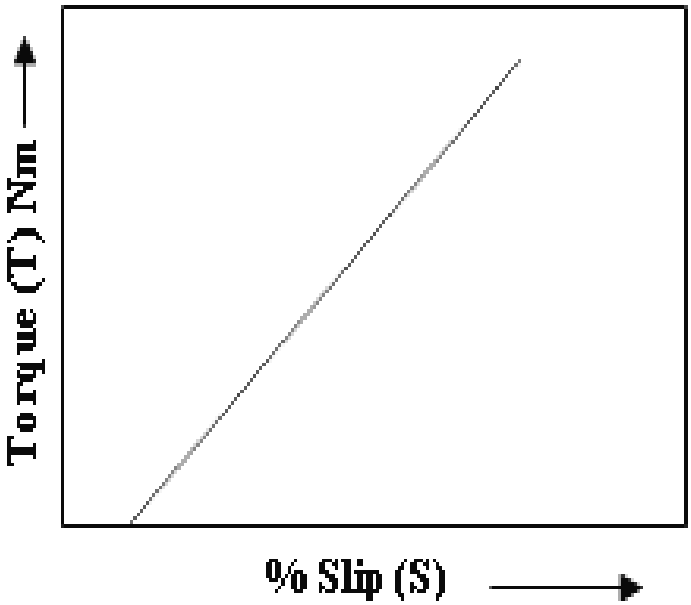

Fig 3.2 Torque –Slip Characteristics

RESULT:

VIVA- QUESTION:

1. Why the Single phase induction motor is not self starting?
2. What is the function of capacitor in single phase induction motor?
3. What is the function of centrifugal Switch in induction motor?
4. What is the Phase Angle difference between main winding and running winding in split phase induction motor?
5. What is circle diagram?
6. What are the tests to be conducted to obtain the circle diagram?
7. Is it Possible to change the direction of rotation of a single Phase Induction Motor? How?
8. What are the starting methods available for single Phase Induction Motor?
9. What is the use of auxiliary winding in the single Phase Induction Motor?
10. What are theories's used to explain the motor behaviour?
11. Can you say some domestic applications of single Phase Induction Motor?
12. Where the starting winding of a single Phase Induction Motor is placed?
13. What is the use of shading coil in the shaded pole Motor?
14. What is the function of capacitor in a single induction motor?
15. What is the use of shading coil in the single phase induction motor?
16. Name any two applications of shaded pole induction motors. Are they reversible speed motors?
17. Discuss the characteristics of single phase series motor.
18. Compare the performance and applications of resistance split phase and permanent capacitor single phase induction motor
19. List out four applications of shaded pole induction motor.
20. Why capacitor-start induction motor advantages?

Ex No: 4	Load Test on DC Shunt Motor
Date:	

AIM:

To draw the performance characteristics of given DC shunt motor by conducting load test.

OBJECTIVES:

1. To determine the efficiency of the given DC shunt motor by conducting load test.
2. To find the various electrical parameters as torque, input power, output power etc.
3. To obtain the electrical and mechanical characteristics for the given DC shunt motor.

APPARATUS REQUIRED:

S.NO	APPARATUS NAME	RANGE	TYPE	QUANTITY
01.	Voltmeter	(0-300V)	MC	1
02.	Ammeter	(0-20A)	MC	1
03.	Rheostat			1
04.	Tachometer	-	Digital	1
05.	Connecting wires	-	-	As required

FORMULA USED:

1. Torque (T) = $(S_1 \sim S_2)$ x R x 9.81 Nm

   Where

   S_1, S_2 – spring balance readings in Kg

   R – Radius of brake drum in m
2. Input power (Pi) = V_L x I_L watts

   Where

   V_L– line voltage in Volts

   I_L – load current in A
3. Output power (P_0) = $2\pi NT$ / 60 watts

   Where

   N – Speed of motor in rpm

   T – Torque in Nm
4. % Efficiency (η) = (P_0 / P_i) x 100

   Where,

   P_0 – output power in watts

   P_i – input power in watts

PRECAUTIONS:

1. The fuse is selected that its rating is 120% of rated current of the motor.
2. Ensure that the starter handles is in OFF position.
3. The motor field rheostat should be kept at minimum resistance position at the time of starting.
4. Heat produced due to friction between belt and brake drum is reduced by pouring water inside the brake drum.

PROCEDURE:

1. Circuit connections are made as per the circuit diagrams shown in fig1.1.
2. The supply is given by closing DPST switch.
3. The motor is started using three point starters.
4. The motor field rheostat is adjusted from its minimum resistance position to get the rated speed.
5. The no load readings of the voltmeter and spring balance are noted.
6. Increase the load and note down voltmeter, ammeter, spring balance readings & speed for various load currents up to the rated current.
7. The readings are tabulated.
8. Performance characteristics can be drawn from the tabulated readings & calculated quantities.

TABLE 4.1 LOAD TEST ON DC SHUNT MOTOR

Radius of Brake Drum = m

Circumference of Brake Drum= m

S.No	Line Voltage (V_l) Volts	Load Current (I_l) A	Spring Balance Readings			Speed (N) rpm	Torque (T) Nm	Input Power (P_i) Watts	Output Power (P_o) Watts	Efficiency (η) %
			S_1 (Kg)	S_2 (Kg)	S_1-S_2 (Kg)					

MODEL GRAPH:

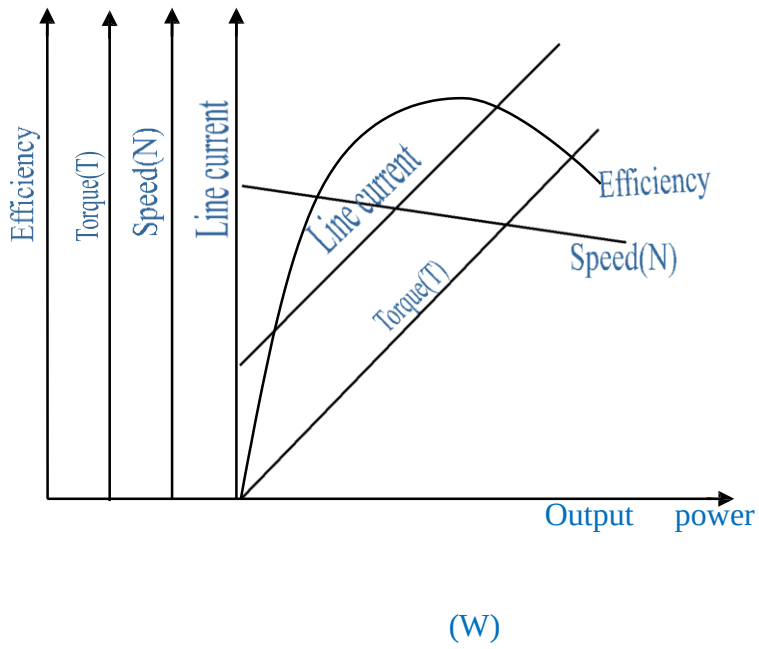

Fig. **4.1 Performance Characteristics**

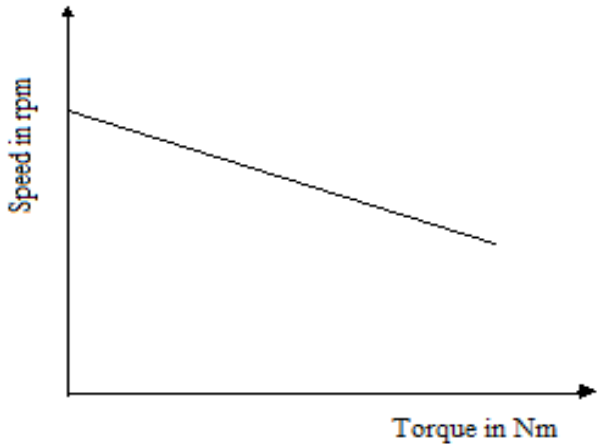

Fig. 4.2 Mechanical Characteristics

RESULT:

VIVA QUESTIONS:

1. What is torque? Write the equation for armature torque of a motor.
2. What is the role of magnetic field in electromechanical energy conversions?
3. State Lenz's law.
4. What are electrical machines?
5. What is a permanent magnet?
6. What is an electromagnet?
7. The amount of force developed by a current conductor is given by which equation?
8. What is the purpose of yoke in DC machine?
9. What is the basic principle of DC motor?
10. What is the function of commutator in DC motor?
11. What is back emf? What will be its value?
12. Write the equation for electrical power developed in the armature equivalent to mechanical power.
13. Mention the different characteristics of a motor.
14. What are the performance curves?
15. If the terminal voltage is reduced to half and the torque remains constant, what will happen to the speed and armature current?
16. What will happen to the speed of a DC motor when its flux approaches zero?
17. What is the necessity of a starter for DC motor?
18. Name different types of starter.
19. What is the function of overload release?
20. Explain how you would reverse the direction of rotation of a DC shunt motor

Ex No: 5	Measurement of Three Phase Power
Date:	

AIM:

To measure the three phase power by 2-Wattmeter for three phase induction motor.

OBJECTIVE:

The student can understand how to measure the three phase power using 2- Wattmeter for three phase induction motor.

APPARATUS REQUIRED:

S.NO	APPARATUS NAME	RANGE	TYPE	QUANTITY
1.	Voltmeter	(0-600V)	MI	1
2.	Ammeter	(0-10A)	MI	1
3.	Wattmeter	600V/10A	UPF	2
4.	Tachometer	-	Digital	1
5.	Connecting wires	-	-	As required

FORMULA USED:

1. Input Power (W) = $W_1 + W_2$ (watts)

2. $\sqrt{3} V_L I_L \cos\phi = W$

$$\cos\phi = \frac{W}{\sqrt{3} V_L I_L}$$

Where,

V_L - voltmeter reading in volts. I_L - ammeter reading in A

cos - power factor.

3. Output power = $2\pi NT / 60$ in watts.
4. Torque = 9.81 ($S_1 \sim S_2$) x R N-M.
5. $\%slip = \frac{N_s - N}{N_s} * 100$
6. %efficiency = (output / input) x100

Where,

Ns – Synchronous Speed in rpm

R - Radius of Brake Drum in meter

r - Rotor Speed in rpm

S1, S2 – Spring Balance Reading, Kg

TABLE 5.1 LOAD TEST ON 3 PHASE SQUIRREL CAGE INDUCTION MOTOR

Radius of Brake Drum = m
Circumference of Brake Drum= m
Multiplying Factor =

S.No	Line Voltage Vl (Volts)	Load Current Il (A)	Input Power (Watts)			Speed N (rpm)	Spring Balance Readings (Kg)			Torque T (Nm)	Slip %	Power Factor	Output Power	Efficiency %
			W_1	W_2	(W_1+W_2)		S_1 (Kg)	S_2 (Kg)	S_1~S_2 (Kg)					

CIRCUIT DIAGRAM FOR LOAD TEST ON 3 PHASE SQUIRRELCAGE INDUCTION MOTOR

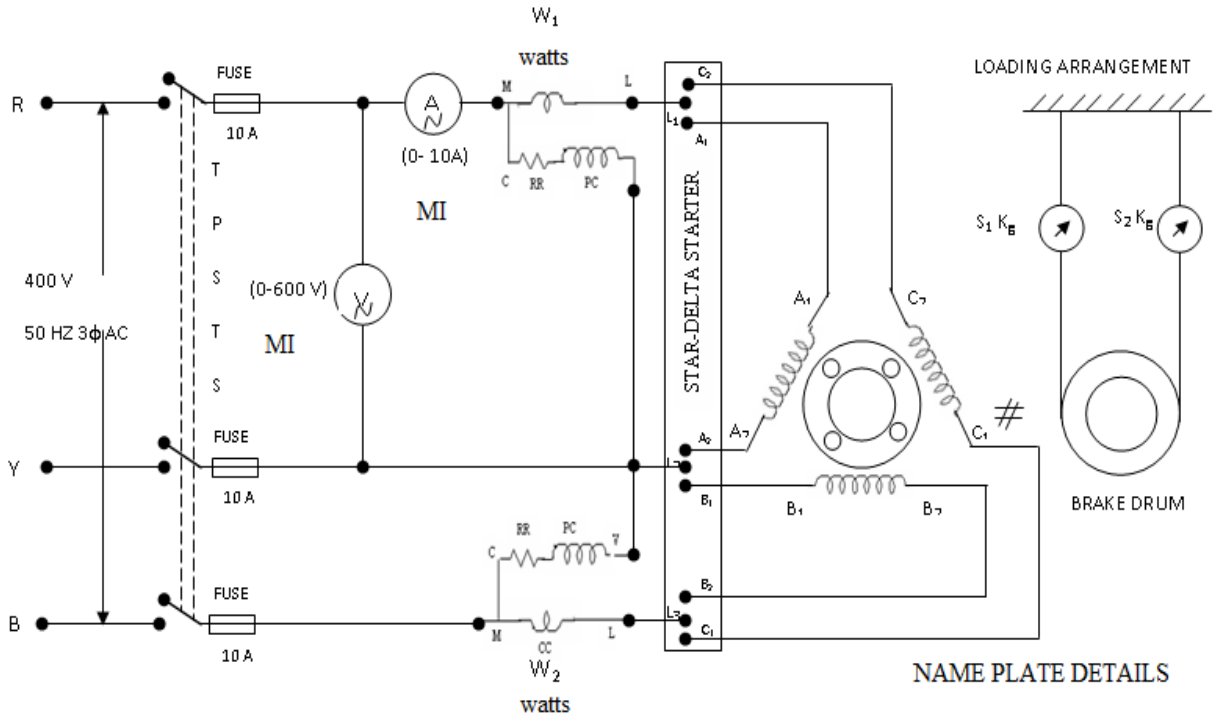

PRECAUTIONS:

1. The rating of the fuse should not be more than 120% of rated current.
2. Ac electrical quantities should be measured by moving iron instruments.
3. There should be no load while starting the machine.
4. Water should be poured to the brake drum when load is applied to reduce the heat.
5. The starter should be in OFF position while making connection.

PROCEDURE:

1. Circuit connection is made as per the circuit diagram
2. Three phase AC supply is given by closing the TPST switch
3. Motor is started using "star- delta" starter.
4. At no load, voltage across the line, current flowing through the motor, input power and speed are noted.
5. Now some load is applied and the changes in the line voltage, load current, speed, Input power, spring balance readings are noted.
6. This procedure is repeated for different values of load up to the rated current.

MODEL CHARACTERISTICS

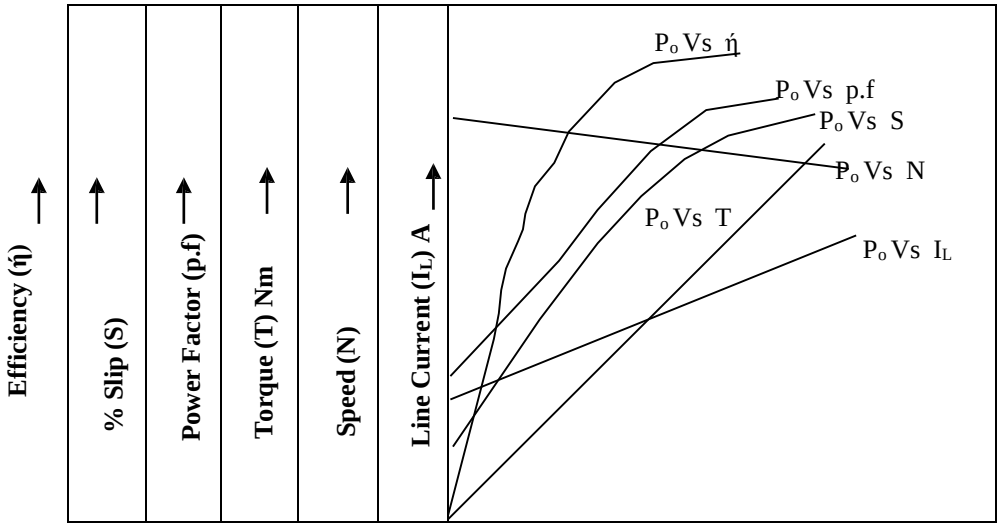

Fig 10.2 Performance Characteristics

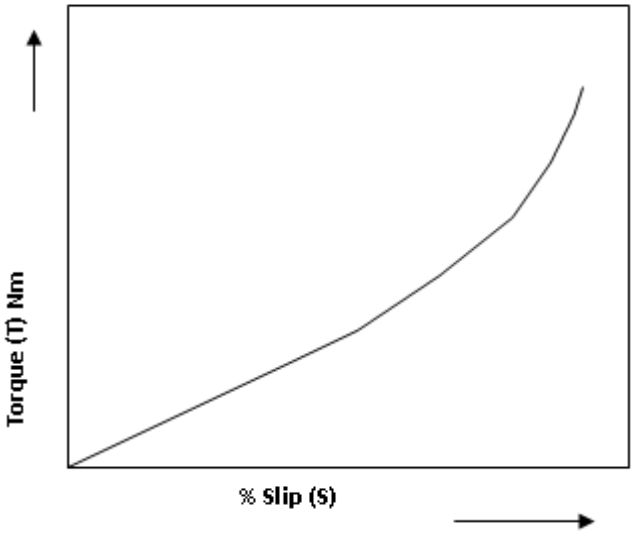

Fig 10.3 Mechanical Characteristics

RESULT:

VIVA QUESTIONS:

1. Why is the stator core of induction motor made of silicon content steel stampings?
2. How many terminals are provided on the terminal box of a squirrel Cage induction motor to be started by a star-delta starter?
3. Why are the slots on the rotor of induction motors slightly skewed?
4. Write down the equation for the speed of the rotating magnetic field.
5. State the condition at which the torque developed in slip ring induction motor is maximum.
6. Define the term transformation ratio.
7. At what load, will the efficiency be maximum?
8. Why it called as ac Motor?
9. What is RMF?
10. What about the direction of RMF?
11. What is the function of slip ring in 3-phase induction motor?
12. How do you reverse the direction of rotation of a 3-phase induction motor?
13. Name the type of starters used in 3 phase Induction Motors.
14. Point out the disadvantages of rotor rheostat control to obtain variable speed of induction motor.
15. Give the functions performed by induction motor starter.
16. How can the reversal of rotation of poly phase induction motor be attained?
17. Write the advantages of split range induction motor
18. Explain the condition for maximum torque under running condition
19. Mention the requirements of starting the two types of 3 phase induction motor.
20. A 3 phase, 4 poles, 50 Hz induction motor is running at 1440rpm. Determine the slip speed and slip.

Ex No: 6	Verification of Circuit Laws
Date:	

AIM:

To Verify Kirchhoff's current law and Kirchhoff's voltage law for the given circuit.

Apparatus Required:

Sl.No.	Apparatus	Range	Quantity
1	RPS (regulated power supply)	(0-30V)	2
2	Resistance	330Ω, 220Ω 1kΩ	6
3	Ammeter	(0-30mA)MC	3
4	Voltmeter	(0-30V)MC	3
5	Bread Board & Wires	--	Required

Statement:

KCL: The algebraic sum of the currents meeting at a node is equal to zero.
KVL: In any closed path / mesh, the algebraic sum of all the voltages is zero.

Precautions:

1. Voltage control knob should be kept at minimum position.
2. Current control knob of RPS should be kept at maximum position.

Procedure for KCL:

1. Give the connections as per the circuit diagram.
2. Set a particular value in RPS.
3. Note down the corresponding ammeter reading
4. Repeat the same for different voltages

Procedure for KVL:

1. Give the connections as per the circuit diagram.
2. Set a particular value in RPS.
3. Note all the voltage reading
4. Repeat the same for different voltages

Circuit - KCL

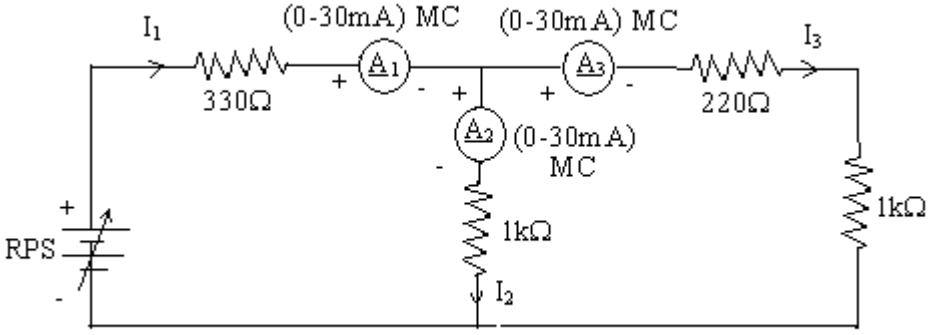

Circuit - KVL

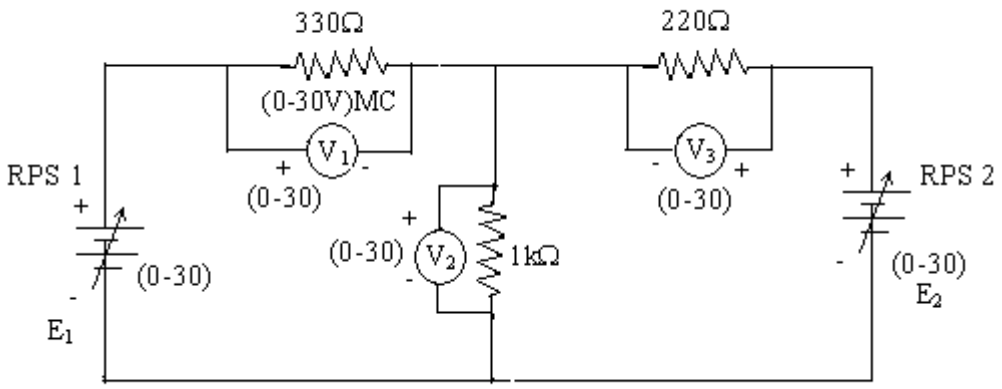

KCL - Theoretical Values:

Sl. No.	Voltage E	Current			$I_1 = I_2 + I_3$
		I_1	I_2	I_3	
	Volts	mA	mA	mA	mA
1	5	5.68	3.12	2.56	5.68
2	10	11.3	6.18	5.12	11.3
3	15	17.05	9.37	7.68	17.05
4	20	22.73	12.49	10.24	22.075
5	25	28.42	15.62	12.68	28.42

KCL - Practical Values:

Sl. No.	Voltage E	Current			$I_1 = I_2 + I_3$
		I_1	I_2	I_3	
	Volts	mA	mA	mA	mA
1	5	5.6	3.1	2.2	5.3
2	15	17.2	9.4	7.6	17
3	25	28	15.6	12.7	28.3

KVL – Theoretical Values

Sl.No.	RPS		Voltage			KVL
	E_1	E_2	V_1	V_2	V_3	$E_1 = V_1 + V_2$
	V	V	V	V	V	V
1	5	5	0.58	4.41	0.583	4.99
2	10	10	1.16	8.83	1.17	9.99
3	15	15	1.75	13.2	1.75	14.95
4	20	20	2.33	17.67	2.33	20
5	25	25	2.913	22.08	2.915	24.993

KVL - Practical Values:

Sl.No.	RPS		Voltage			KVL
	E_1	E_2	V_1	V_2	V_3	$E_1 = V_1 + V_2$
	V	V	V	V	V	V
1	5	5	0.6	4.4	0.56	5
2	10	10	1.13	8.83	1.19	9.96
3	15	15	1.72	13.20	1.78	14.92

Result:

Thus Kirchoff's voltage load and Kirchoff's current law verified both theoretically and practically.

Ex No: 7	Verification of Circuit Theorem
Date:	

AIM:

To Verify circuit Theorem (Superposition, Thevenin's, Norton Theorem) for given circuits

SUPERPOSITION THEOREM:

APPARATUS REQUIRED:

Sl.No.	Apparatus	Range	Quantity
1	RPS (regulated power supply)	(0-30V)	2
2	Ammeter	(0-10mA)	1
3	Resistors	1kΩ, 330Ω, 220Ω	3
4	Bread Board	--	--
5	Wires	--	Required

Statement:

Superposition theorem states that in a linear bilateral network containing more than one source, the current flowing through the branch is the algebraic sum of the current flowing through that branch when sources are considered one at a time and replacing other sources by their respective internal resistances.

Precautions:

1. Voltage control knob should be kept at minimum position
2. Current control knob of RPS should be kept at maximum position

Procedure:

1. Give the connections as per the diagram.
2. Set a particular voltage value using RPS_1 and RPS_2 & note down the ammeter reading
3. Set the same voltage in circuit I using RPS_1 alone and short circuit the terminals and note the ammeter reading.
4. Set the same voltage in RPS_2 alone as in circuit I and note down the ammeter reading.
5. Verify superposition theorem.

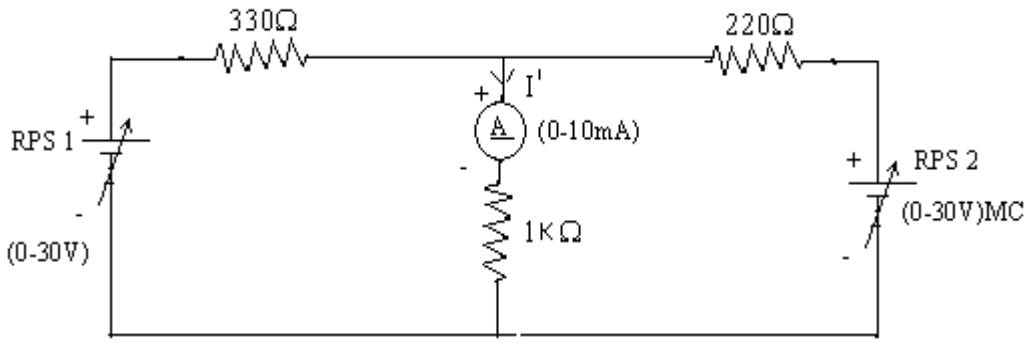

Fig 6.1. Circuit - 1

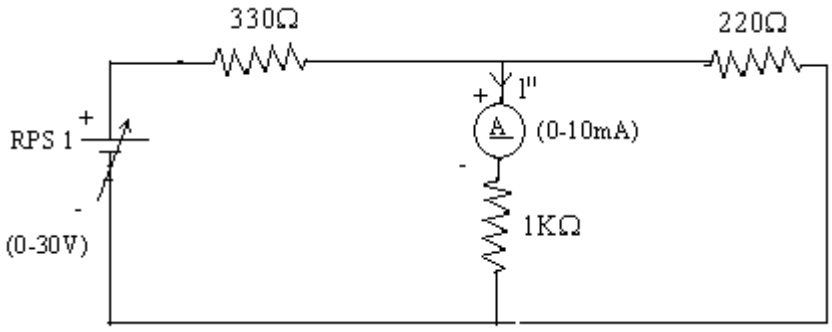

Fig 6.2. Circuit - 2

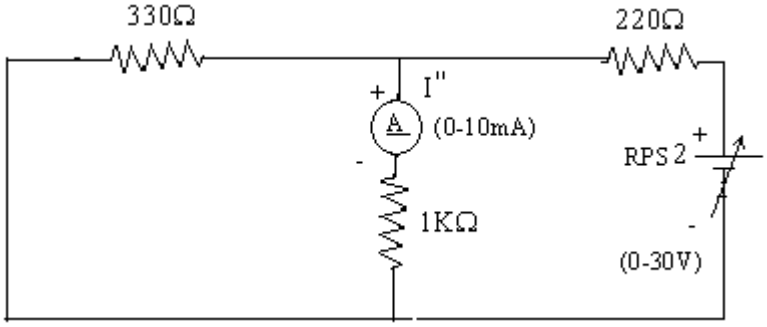

Fig 6.3. Circuit - 3

Theoretical Values

	RPS		Ammeter Reading (I) mA
	1	2	
Circuit – 1	10 V	10 V	I = 8.83
Circuit – 2	10 V	0 V	I'= 3.5
Circuit – 3	0 V	10 V	I"= 5.3

I = I' ~ I" = 8.83

Practical Values

	RPS		Ammeter Reading (I) mA
	1	2	
Circuit – 1	10 V	10 V	I = 8.5
Circuit – 2	10 V	0 V	I'= 3.5
Circuit – 3	0 V	10 V	I"= 5

I = I' ~ I" = 8.5 mA
= 3.5 + 5 = 8.5 mA

Thevenin's Theorem:

Apparatus Required:

Sl.No.	Apparatus	Range	Quantity
1	RPS (regulated power supply)	(0-30V)	2
2	Ammeter	(0-10mA)	1
3	Resistors	1KΩ, 330Ω	3,1
4	Bread Board	--	Required
5	DRB	--	1

Statement:

Any linear bilateral, active two terminal network can be replaced by an equivalent voltage source (V_{TH}). Thevenin's voltage or V_{OC} in series with looking pack resistance R_{TH}.

Precautions:

1. Voltage control knob of RPS should be kept at minimum position.
2. Current control knob of RPS should be kept at maximum position

Procedure:

1. Connections are given as per the circuit diagram.
2. Set a particular value of voltage using RPS and note down the corresponding ammeter readings.

To find V_{TH}

3. Remove the load resistance and measure the open circuit voltage using multimeter (V_{TH}).

To find R_{TH}

4. To find the Thevenin's resistance, remove the RPS and short circuit it and find the R_{TH} using multimeter.
5. Give the connections for equivalent circuit and set V_{TH} and R_{TH} and note the corresponding ammeter reading.
6. Verify Thevenins theorem.

Theoretical and Practical Values

	E(V)	V_{TH}(V)	R_{TH}(Ω)	I_L (mA)	
				Circuit - I	Equivalent Circuit
Theoretical	10	5	495	3.34	3.34
Practical	10	4.99	484	3.3	3.36

Circuit - 1 : To find load current

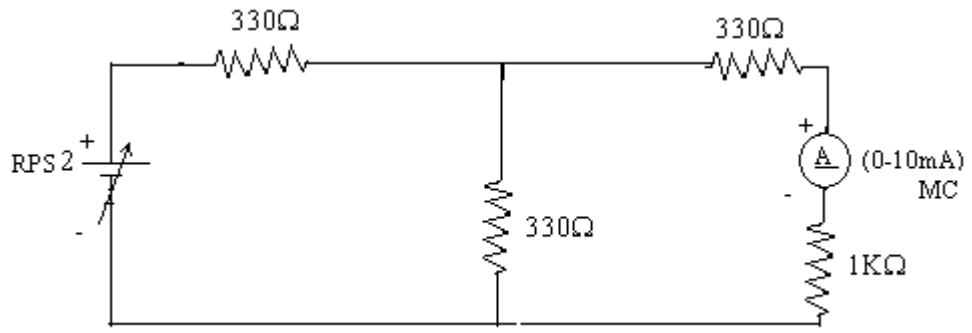

To find V_{TH}

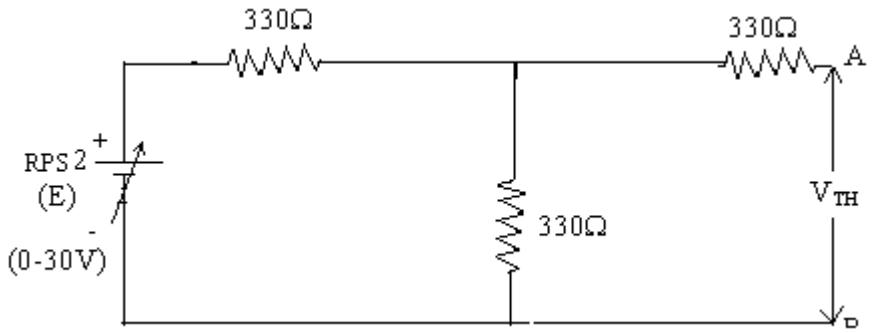

To find R_{TH}

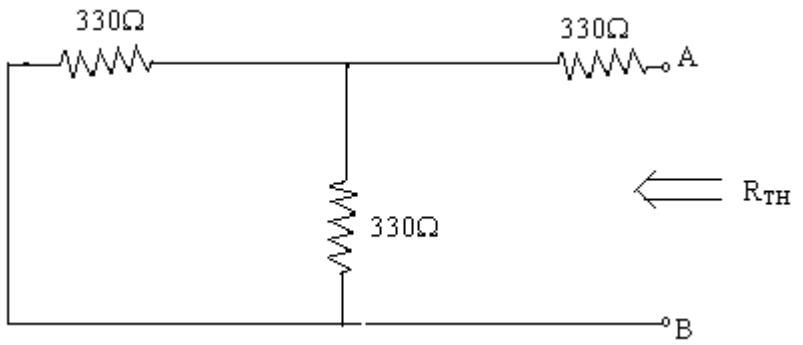

Thevenin's Equivalent circuit:

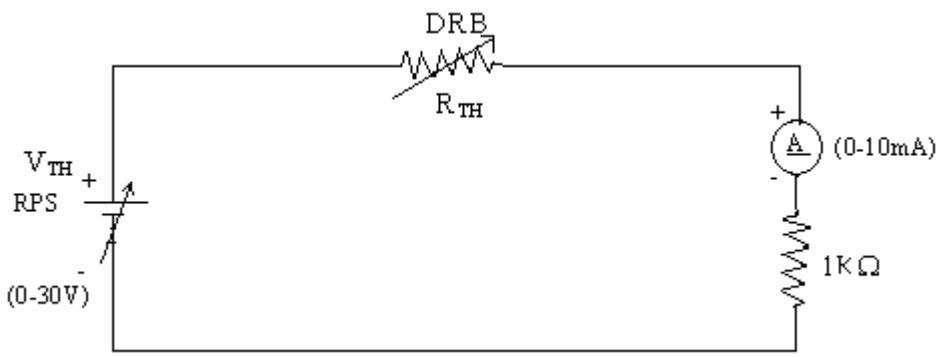

Norton Theorem:

Apparatus Required:

Sl.No.	Apparatus	Range	Quantity
1	Ammeter	(0-10mA) MC (0-30mA) MC	1 1
2	Resistors	330, 1KΩ	3,1
3	RPS	(0-30V)	2
4	Bread Board	--	1
5	Wires	--	Required

Statement:

Any linear, bilateral, active two terminal network can be replaced by an equivalent current source (I_N) in parallel with Norton's resistance (R_N)

Precautions:

1. Voltage control knob of RPS should be kept at minimum position.
2. Current control knob of RPS should be kept at maximum position.

Procedure:

1. Connections are given as per circuit diagram.
2. Set a particular value in RPS and note down the ammeter readings in the original circuit.

To Find I_N:

3. Remove the load resistance and short circuit the terminals.
4. For the same RPS voltage note down the ammeter readings.

To Find R_N:

5. Remove RPS and short circuit the terminal and remove the load and note down the resistance across the two terminals.

Equivalent Circuit:

6. Set I_N and R_N and note down the ammeter readings.
7. Verify Norton's theorem.

To find load current in circuit 1:

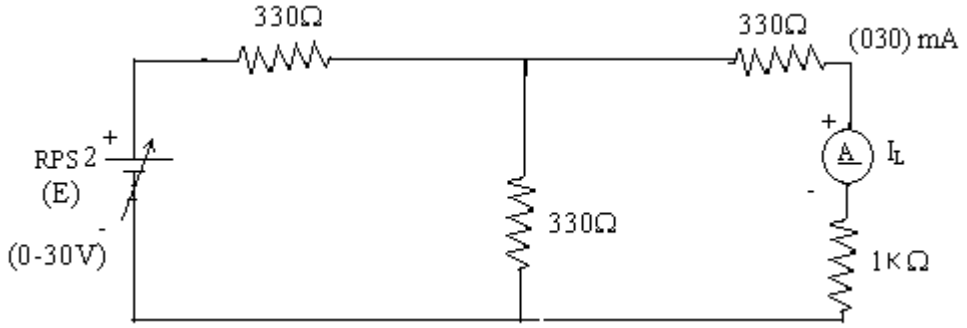

To find I_N

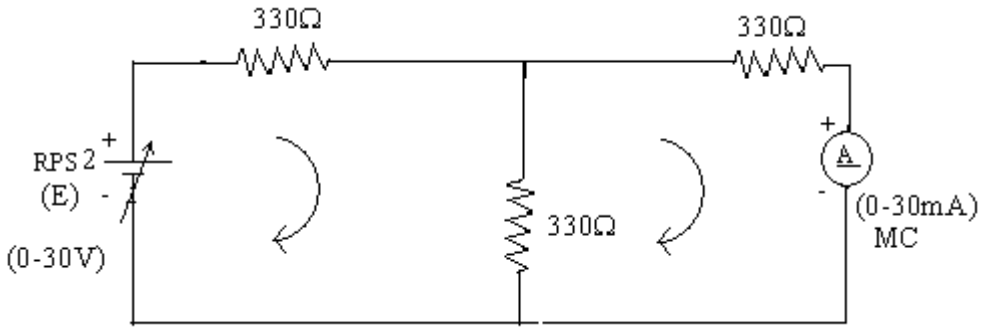

To find R_N

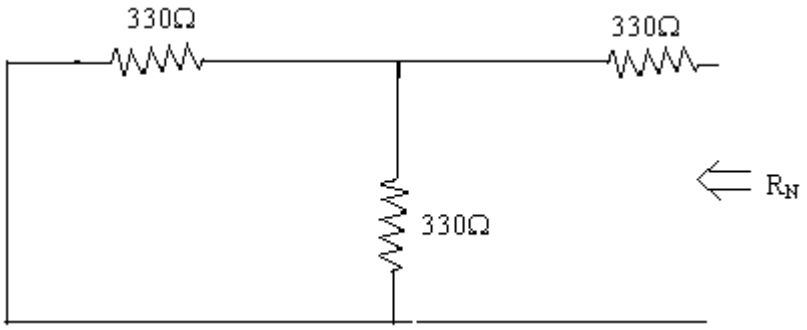

Norton's equivalent circuit

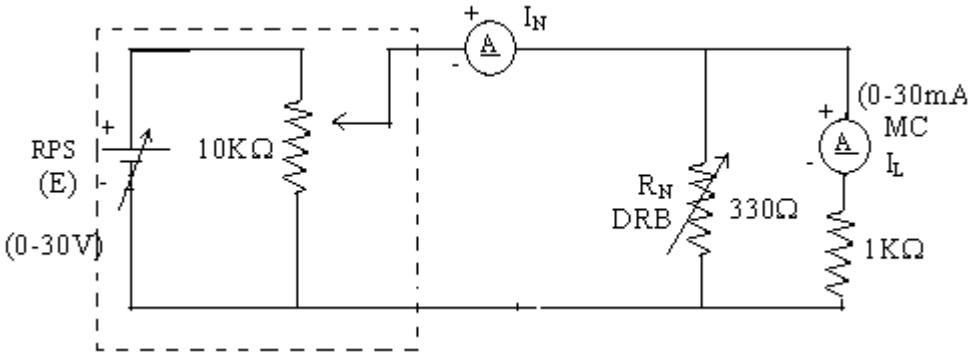

Constant current source

Theoretical and Practical Values

	E (volts)	I_N (mA)	R_N (Ω)	I_L (mA)	
				Circuit - I	Equivalent Circuit
Theoretical Values	10	10.10	495	334	3.34
Practical Values	10	10.4	485	3.4	4

Result:

Thus circuit theorem were verified both theoretically and practically.

Ex No: 8	Diode Based Application Circuit
Date:	

AIM:

To Plot the output waveform of half wave and full wave rectifier.

Half Wave Rectifier:

Objective:

1. To plot Output waveform of the Half Wave Rectifier.
2. To find ripple factor for Half Wave Rectifier using the formulae.
3. To find the efficiency, Vr(pp), Vdc for Half Wave Rectifier.

Apparatus Required:

S. No	Apparatus	Type	Range	Quantity
1.	Transformer	-	6-0-6 V, 500mA,1A	1
2.	Resistance	-	470Ω,1/2 watt rating	1
3.	Capacitor	-	470µF	1
4.	Diode	IN4001	-	1
5.	Bread board	-	-	As required
6.	Connecting Wires	-	-	As required

Theoretical calculations for Ripple Factor:

Without Filter:

$V_{rms} = V_m / 2$

$$V_{dc} = \frac{V_m}{\pi}$$

Ripple Factor (Theoretical) $= \sqrt{(\frac{V_{rms}}{V_{dc}})^2 - 1} = 1.21$

Ripple Factor (practical) $\gamma = \frac{V_{ac}}{V_{dc}}$ where $V_{ac} = \sqrt{(V_{rms}^2 - V_{dc}^2)}$

With Filter:

Ripple Factor (Theoretical) $r = \frac{1}{2\sqrt{3}fCR}$

Where f = 50Hz, R = 1kΩ, C = 1000μF

$$V_{ac} = \frac{V_{r(p-p)}}{2\sqrt{3}}$$

$$V_{dc} = V_m - \frac{V_{r(p-p)}}{2}$$

Ripple Factor (practical) $\gamma = \frac{V_{ac}}{V_{dc}}$

Percentage Regulation $= \frac{V_{NL} - V_{FL}}{V_{FL}} * 100$ %

V_{NL} = DC voltage at the load without connecting the load (Minimum current).

V_{FL} = DC voltage at the load with load connected.

Efficiency $\eta = \frac{P_{DC}}{P_{AC}}$

$P_{AC} = V_{2rms} / R_L$

$P_{DC} = V_{dc} / R_L$

The ripple factor can be lowered by increasing the value of the filter capacitor or increasing the load capacitance.

Circuit Diagram:

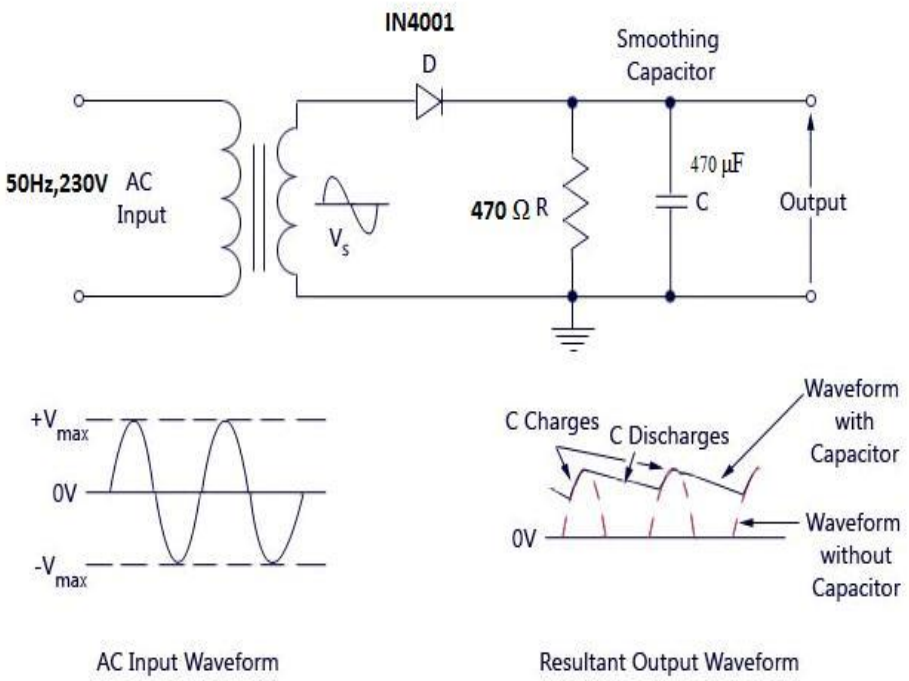

Procedure:

1. Connections are given as per the circuit diagram without capacitor.
2. Apply AC main voltage to the primary of the transformer. Feed the rectified

output voltage to the CRO and measure the time period and amplitude of the waveform.

3. Now connect the capacitor in parallel with load resistor and note down the amplitude and time period of the waveform.
4. Measure the amplitude and time period of the transformer secondary (input waveform) by connecting CRO.
5. Plot the input, output without filter and with filter waveform on a graph sheet.
6. Calculate the ripple factor.

Tabulation:

S.No.	**Measured**	**Input Waveform**	**Output Waveform** (without filter)	**Ripple Voltage** (with filter)
1.	Amplitude			
2.	Time Period			
3.	Frequency			

Viva Questions:

1. What is the purpose of a rectifier?
2. Why filter is used in a rectifier?
3. What are the advantages of half wave rectifier?
4. Define Ripple factor and Efficiency. State the ideal values.
5. Define PIV. Give the PIV of Half wave rectifier.

Full Wave Rectifier:

Objectives:

1. To plot Output waveform of the Full Wave Rectifier
2. To find ripple factor for Full Wave Rectifier using the formulae
3. To find the efficiency, Vp(rect), Vdc for Full Wave Rectifier

Apparatus Required:

S. No	**Apparatus**	**Type**	**Range**	**Quantity**
1.	Transformer	-	6-0-6 V	1
2.	Resistance	-	470Ω, 1/2 watt	1
3.	Capacitor	-	470µF	1
4.	Diode	IN4001	-	2
5.	Bread board	-	-	As required
6.	Connecting wires	-	–	As required

Ripple Factor:

Ripple factor is defined as the ratio of the effective value of AC components to the average DC value. It is denoted by the symbol 'γ'.

$$\gamma = \frac{V_{ac}}{V_{dc}}, (\gamma = 0.48)$$

Efficiency:

The ratio of output DC power to input AC power is defined as efficiency.

$$\eta = \frac{(V_{dc})^2}{(V_{ac})^2}$$

η= 81% (if R >> R_f, then R_f can be neglected).

The maximum efficiency of a Full Wave Rectifier is 81.2%.

Percentage of Regulation:

It is a measure of the variation of DC output voltage as a function of DC output current (i.e., variation in load).

Percentage of regulation = $(\frac{V_{NL} - V_{FL}}{V_{FL}}) * 100$ %

V_{NL} = Voltage across load resistance, when minimum current flows through it. V_{FL} = Voltage across load resistance, when maximum current flows through.

For an ideal Full-wave rectifier, the percentage regulation is 0 percent. The percentage of regulation is very small for a practical full wave rectifier.

Peak- Inverse - Voltage (PIV):

It is the maximum voltage that the diode has to withstand when it is reverse biased. PIV = $2V_m$

Theoretical Calculations:

Without filter:

$$V_{rms} = \frac{V_m}{\sqrt{2}}$$

$$V_{ac} = \sqrt{(V_{rms}^2 - V_{dc}^2)}$$

$$V_{dc} = \frac{2V_m}{\pi}$$

Ripple factor (Theoretical) = $\sqrt{(\frac{V_{rms}}{V_{dc}})^2 - 1} = 0.48$

Ripple Factor (Practical) $\gamma = \frac{V_{ac}}{V_{dc}}$

With filter:

Ripple factor (Theoretical) $\gamma = \frac{1}{4\sqrt{3}fCR}$

Where f = 50Hz, R = 1KΩ, C = 1000μF.

$$V_{ac} = \frac{V_{r(p-p)}}{2\sqrt{3}}$$

$$V_{dc} = V_m - \frac{V_{r(p-p)}}{2}$$

Ripple Factor $\gamma = \frac{V_{ac}}{V_{dc}}$

Percentage Regulation = $(\frac{V_{NL} - V_{FL}}{V_{FL}}) * 100$ %

V_{NL} = DC voltage at the load without connecting the load (Minimum current).

V_{FL} = DC voltage at the load with load connected.

Efficiency $\eta = \frac{P_{DC}}{P_{AC}}$ %u200B

$P_{AC} = V_{2rms} / R_L$

$P_{DC} = V_{dc} / R_L$

Circuit Diagram:

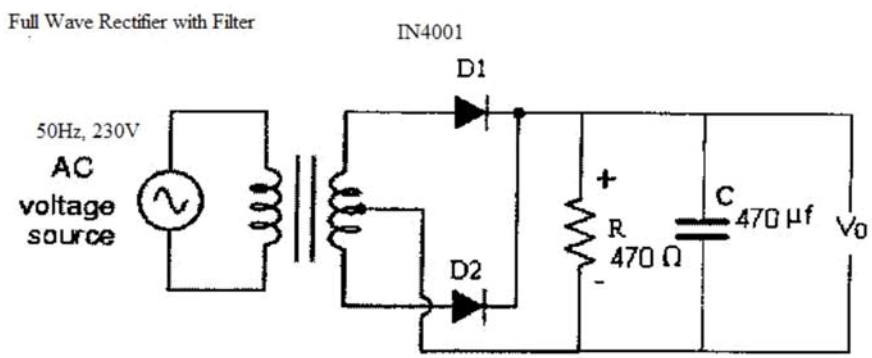

MODEL GRAPH:

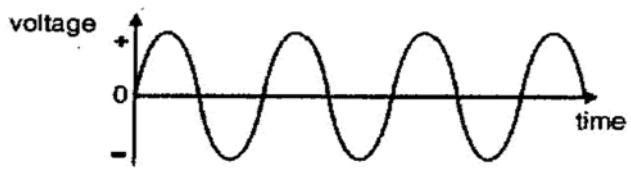

Input Waveform

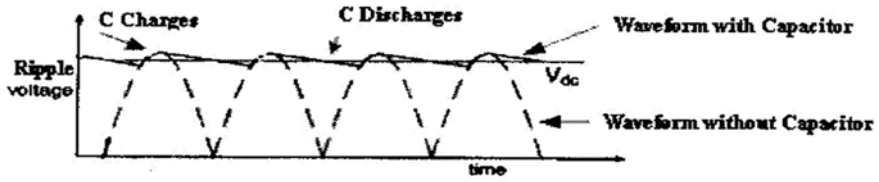

Resultant Output Waveform

Procedure:

1. Connections are given as per the circuit diagram without capacitor.
2. Apply AC main voltage to the primary of the transformer. Feed the rectified output voltage to the CRO and measure the time period and amplitude of the waveform.
3. Now connect the capacitor in parallel with load resistor and note down the amplitude and time period of the waveform.
4. Measure the amplitude and time period of the transformer secondary(input waveform) by connecting CRO.
5. Plot the input, output without filter and with filter waveform on a graph sheet.
6. Calculate the ripple factor.

Observations:

S.No.	**Measured**	**Input Waveform**	**Output Waveform** (without filter)	**Ripple Voltage** (with filter)
1.	Amplitude			
2.	Time Period			
3.	Frequency			

Viva Question:

1. Each diode in a center-tapped full-wave rectifier is _____ -biased and conducts for of the input cycle.
   a) Forward, 90^0
   b) Reverse, 180^0
   c) Forward, 180^0
   d) Reverse, 90^0
2. What is the V_{RRM} (PIV rating) for the 1N4001 rectifier diode? Give the PIV of Full Wave Rectifier.
3. Define Efficiency of rectifier. Compare the efficiency of Full Wave and Half Wave rectifier.

Result:

Thus the output waveform of half wave and full wave rectifier were plotted

Ex No: 9 Date:	**Transistor Based Application Circuit**

AIM:

To study and to plot the characteristics of transistor based application circuit

APPARATUS REQUIRED:

S.NO	APPARATUS	RANGE	QUANTITY
1	RPS	(0-30)V	2
2	Resistor	1KΩ	2
3	DC Voltmeter	(0-10)V	1
4	DC Ammeter	(0-30)mA	2
5	DC Ammeter	(0-3)mA	1
6	SCR	2P4M	1
7	Bread board	-	1
8	Connecting wires	-	Few

THEORY:

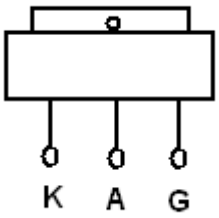

Pin Diagram of SCR

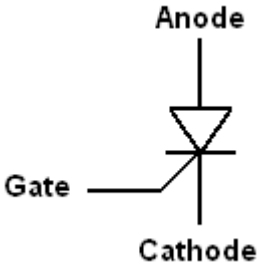

Symbol of SCR

The SCR is a unidirectional device has two states, ON or OFF, and it allows current to flow in only one direction.

SCR's can remain in the OFF state even though the applied potential may be several thousand volts. In the ON state, they can pass several thousand amperes. When a small signal is applied between the gate and cathode terminals, the SCR will begin conducting within 3 microseconds. Once turned on, it will remain on until the current through it is reduced to a very low value, called the holding current.

Because the SCR allows current to flow in only one direction, two SCR's are connected in an inverse parallel configuration to control AC current.

FORWARD CHARACTERISTICS:

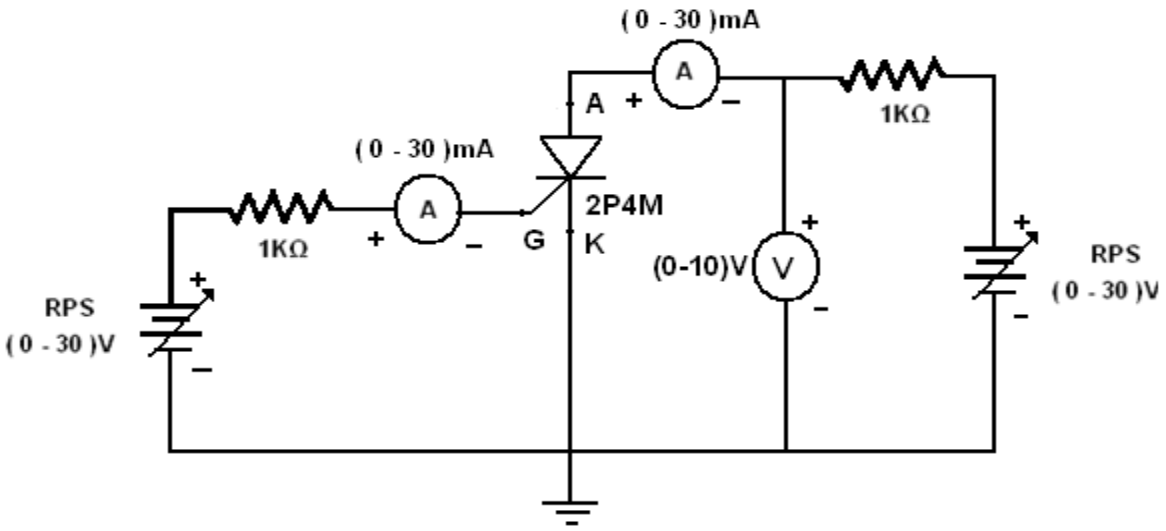

PROCEDURE:

1. Connections are given as per the circuit diagram.
2. The supply is switched ON.
3. Set the gate current IG equal to firing current.
4. Vary the anode to cathode voltage (VAK) and note down the corresponding anode current IA. Note that the VAK suddenly drops and there is a sudden increase in the IA.
5. Repeat the above procedure for various gate current IG.
6. Plot the graph between VAK and IA.

REVERSE CHARACTERISTICS:

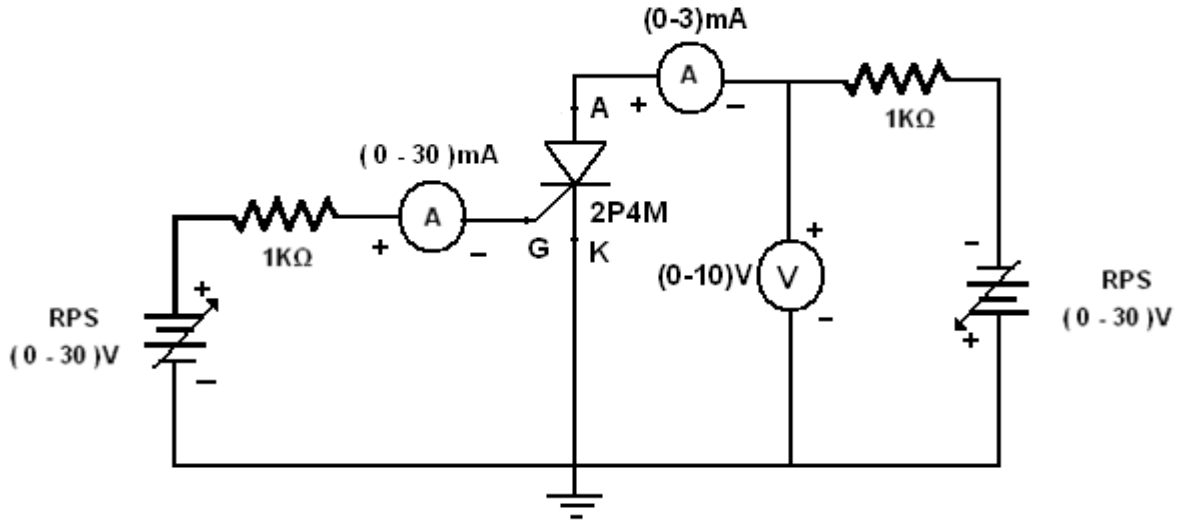

PROCEDURE:

1. Connections are given as per the circuit diagram.
2. The supply is switched ON.
3. Set the gate current IG equal to firing current.
4. Vary the anode to cathode voltage (VAK) and note down the corresponding anode current IA. Note that the IA is negligibly small and practically it is neglected.
5. Repeat the above procedure for various gate current IG.
6. Plot the graph between VAK and IA.

MODAL GRAPH:

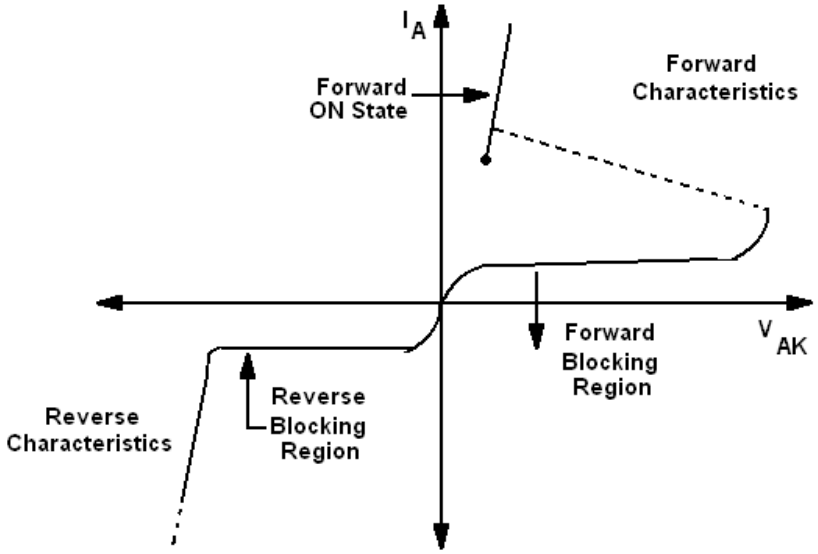

Characteristics of a SCR

TABLE:

S.No	Forward Bias		Reverse Bias	
	IG = 25mA		IG = 25mA	
	VAK(volts)	IA (mA)	VAK(volts)	IA (mA)
1				
2				
3				
4				
5				
6				
7				
8				

RESULT:

Thus the forward and reverse characteristics of a silicon controlled rectifier are analyzed.

Ex No: 10	**Study of CRO and Measurement of AC Signal**
Date:	